All drawings are prefixed CCE/

General

A1	Cycle Symbol Diagram 1057	165
A3	Raised entry treatment on side roads	166
A4	Raised table at junction	167
A5	20mph on-carriageway (lanes terminated)	168
A6	Sinusoidal profile road hump	169
A7	Road Hump – smooth entry profile	170

Cycle Lanes (on carriageway)

B1	Cycle lanes at road junctions	171
B1.1	Cycle lanes at junctions with parked vehicles	172
B2	Advanced Stop Lines with single traffic lane	173
B3	Advanced Stop Lines with two traffic lanes	174
B4	Advanced Stop Lines with central and near side feeder lanes	175
B4.1	Advanced Stop Lines with two lanes and central feeder lane	176
B5	Advanced Stop Lines with 'gate' lead-ins	177
B6	Cycle lanes on narrow roads with centre-line (<5000vpd)	178
B6.1	Cycle lanes on narrow roads without centre-line (<3000vpd)	179
B7	Cycle lanes at traffic islands	180
B8	Cycle lanes at right turn lanes	181
B9	Cycle lanes at parking bays	182
B10	Cycle lane junction with side-road cycle route	183
B11	Cycle lane at left-turn slip lanes (off and on)	184
B12	Cycle lane segregation types	185
B13	Mandatory contraflow cycle lane (with segregation at entry points)	186
B14	Advisory contraflow cycle lane	187
B15	Contraflow cycling, with or without advisory lanes	188
B16	Cycle lanes at zig-zags on two way roads	189
B20	Markings and coloured surfacing for guidance	190
B21	Cycle lanes continuous through signal controlled junctions	191

Tracks/paths

C1	Cycle track edge details	192
C2	Cycle track at road junction (not cycle priority)	193
C2.1	Cycle track at track junction (not cycle priority)	194
C3	Cycleway crossing footway to join/cross carriageway	195
C4	Access/Exit to segregated path	196
C4.1	Access to Shared Path	197
C4.2	Exit from Shared Path to carriageway	198
C5	Segregated shared route joining/leaving crossing point	199

C6	Cycle track at crossover (cycle priority)	200
C7	Cycle track at entry-treatment – Set-back < 5.0m (vehicle priority)	201
C7.1	Cycle track at one-way exit-treatment – Set-back < 5.0m (cycle priority)	202
C8	Cycle track at entry-treatment – Set-back 5m or more (cycle priority)	203
C9	Footpath joining a segregated route	204
C10	Cycle-track joining a segregated route	205
C11	Segregated route with shared area at 'T' junction	206
C11.1	Segregated route 'T' junction linking to carriageway	207
C12	Segregated route at a Toucan crossing	208
C13	Segregated route alongside a Toucan crossing	209
C14	Cycle track 'Give-way' crossing of road	210
C15	Cycle track junction with opposite side-road	211
C16	Toucan at road junction	212
C17	Cycle track at Zebra	213
C18	Cycle track at Zebra – changes to lane	214
C19	Cycle track crossing adjacent to Zebra	215
C21	Segregated route at Parallel signal controlled crossing	216
C25	Shared path terminated at side-road	217
C26	Segregated path becoming Shared Path past bus stop	218
C27	Segregated path becoming Shared Path past bus boarder	219
C28	Segregated path at bus boarder, front shelter	220
C29	Segregated path at bus boarder, rear shelter	221

Parking

P1	Sheffield parking stand	222
P1.1	Sheffield parking stand (2005 TfL pattern)	223
P2	Cycle parking layouts	224

Signing

S1	Route number road markings	225
S2	Cycle symbols for route directions	226
S3	Route marker signs and route number patches	227
S4	Route direction signs – flag repeaters	228
S5	Flag type direction signs	229
S6	Variations on flag type direction signs	230
S7	Stack type advance direction signs	231
S8	Map type advance direction signs	232
S9	Combined direction signs	233
S10	Shared use courtesy sign	234
S11	Cycle parking signs	235

Notes

1. Preformed markings are available and preferable.

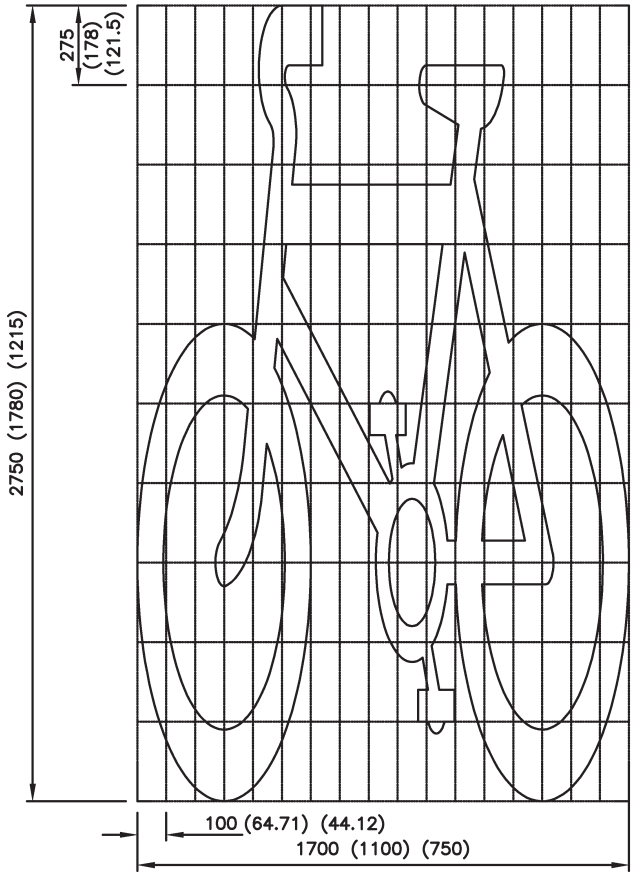

ROAD MARKING DIAGRAM 1057

Dimensions shown are in millimetres. Cycle symbol used for road marking has its vertical dimension stretched by a factor of 2.75.

NOTES

1. The colour for both the sign symbol & the road marking is white.
2. The background of the sign is blue.
3. The gridlines do not form part of the symbol.
4. The direction of the symbol can be reversed.

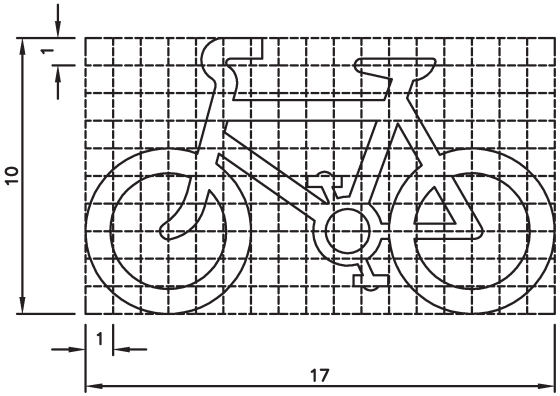

CYCLE SYMBOL FOR SIGN

Dimensions are given in grid divisions (normally 1/4 'x'–height)

Before using this drawing confirm that it has not been superseded.

Transport for London

Cycling Centre of Excellence

Windsor House
42-50 Victoria Street
LONDON SW1H 0TL
Telephone 020 7343 5000

Date	Drawn	Checked	Approved	Title	Scale	Drawing no.	Rev.
JAN 2005	DSB	AGB	JL	CYCLE SYMBOL 1057	NTS	CCE/A1	

Notes

1. All dimensions in mm unless otherwise stated
2. Surfacing materials can vary
3. Normal table height 100mm
4. Length of table dependent on footway width and location, 6m on bus routes
5. Bollards may be provided to prevent vehicle over-run
6. Kerbline may be built out on one or both sides
7. Ramps can be sinusoidal, see CCE/A6
8. Buff blister tactile may be replaced with contrasting grey blister tactile

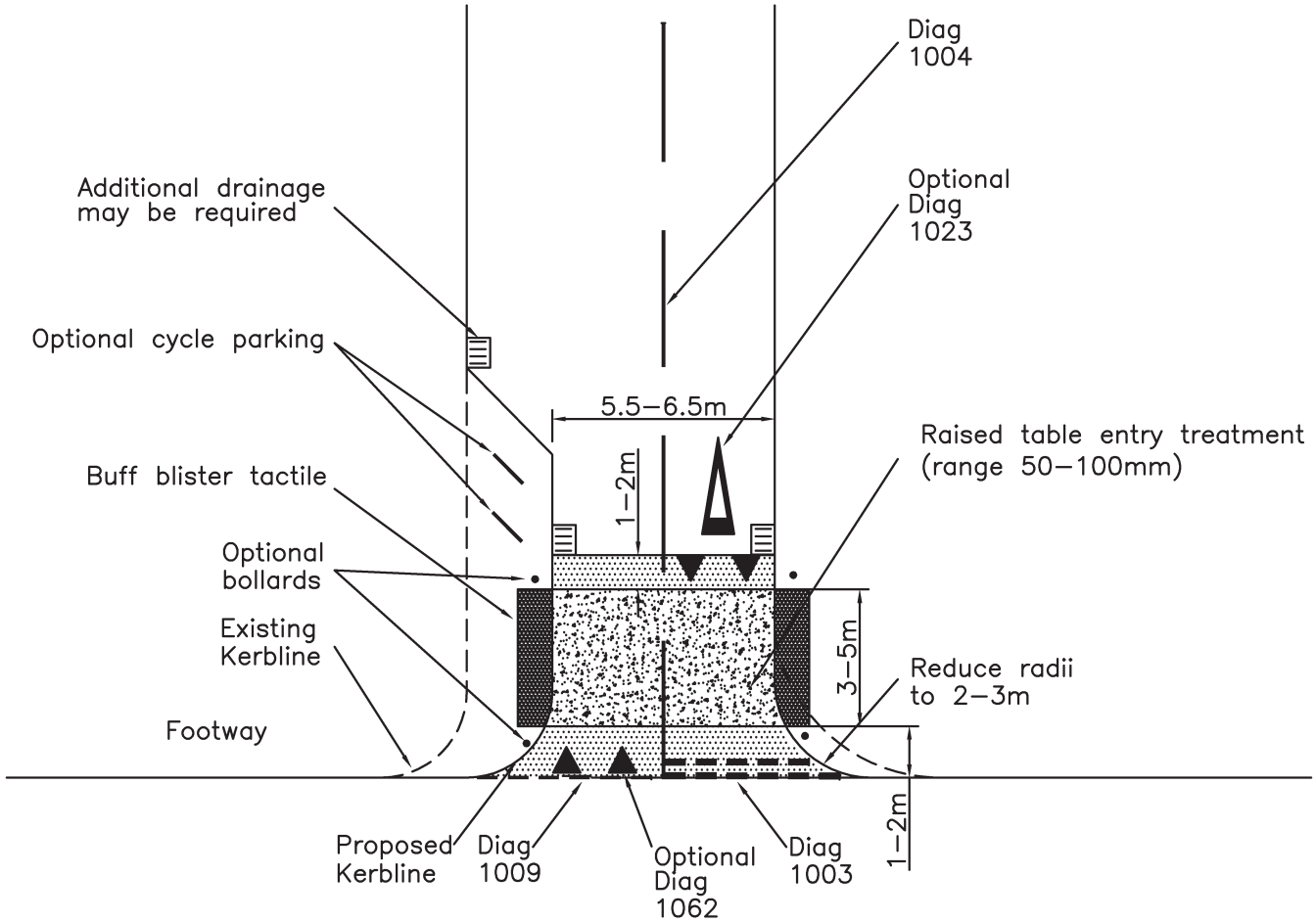

See CCE/B1 for cycle lane markings and symbols at junction

Transport for London

Cycling Centre of Excellence

Windsor House
42-50 Victoria Street
LONDON SW1H 0TL
Telephone 020 7343 5000

Date	Drawn	Checked	Approved	Title	Scale	Drawing no.	Rev.
JAN 2005	DSB	AGB	JL	RAISED ENTRY TREATMENT ON SIDE ROAD	NTS	CCE/A3	

Notes

1. All dimensions in mm unless otherwise stated
2. Add extra pedestrian crossing points and associated tactile paving as appropriate
3. Normal table height 100mm
4. Length of table dependent on footway width and location
5. Bollards may be provided to prevent vehicle over-run
6. Diag 557.1 not required in 20 mph limits or zones
7. Kerblines may be built-out on one or both sides
8. Ramps can be sinusoidal, see CCE/A6
9. Buff blister tactile may be replaced with contrasting grey blister tactile

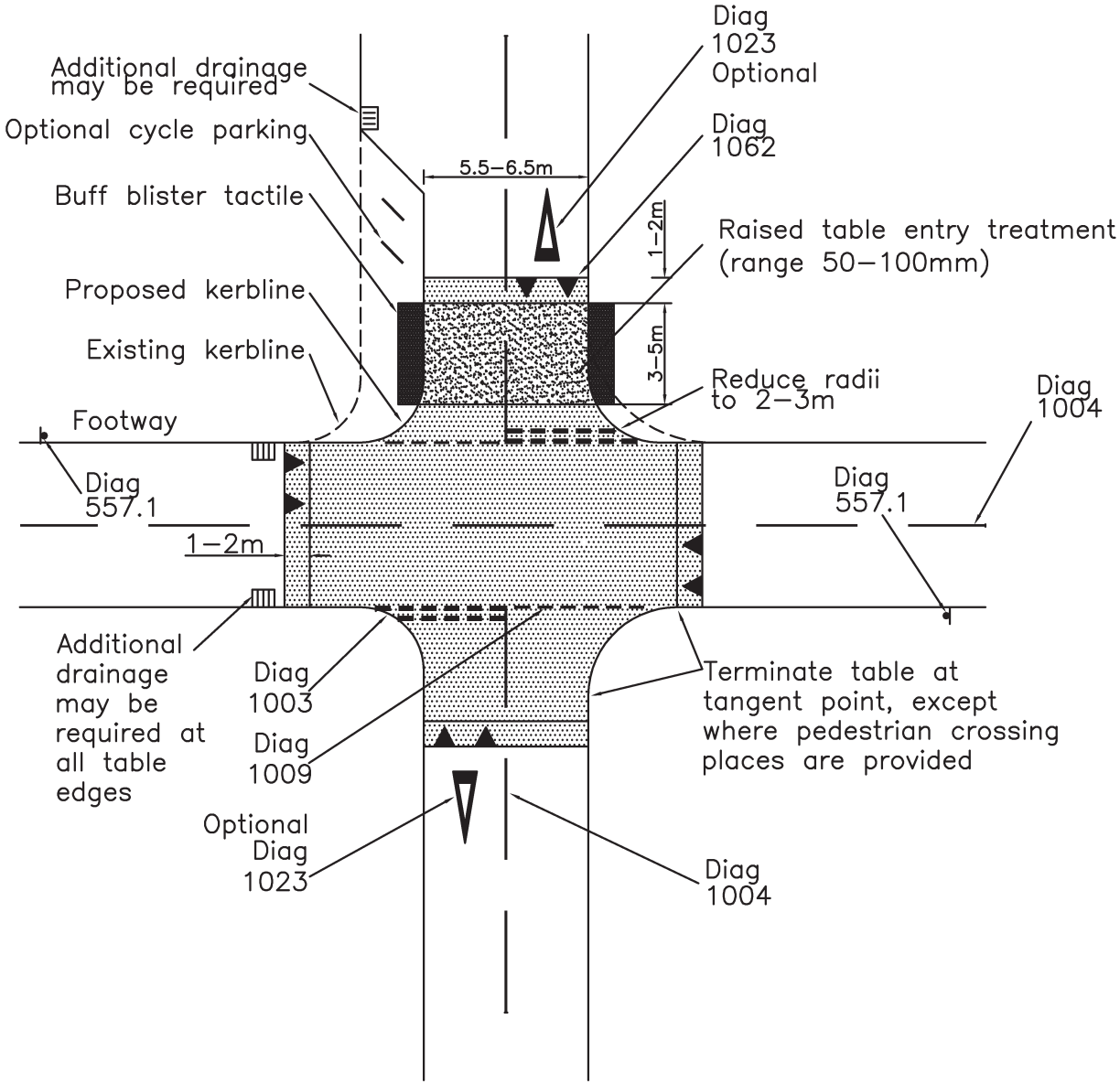

Transport for London

Cycling Centre of Excellence

Windsor House
42-50 Victoria Street
LONDON SW1H 0TL
Telephone 020 7343 5000

Date	Drawn	Checked	Approved	Title	Scale	Drawing no.	Rev.
JAN 2005	DSB	AGB	JL	RAISED TABLE AT JUNCTION	NTS	CCE/A4	

Notes

1. All dimensions in mm unless otherwise stated
2. Diag 967 signs and Diag 1057 symbols may not be necessary in 20mph limits and zones
3. Diag 967 signs are not required at each Diag 1057 marking

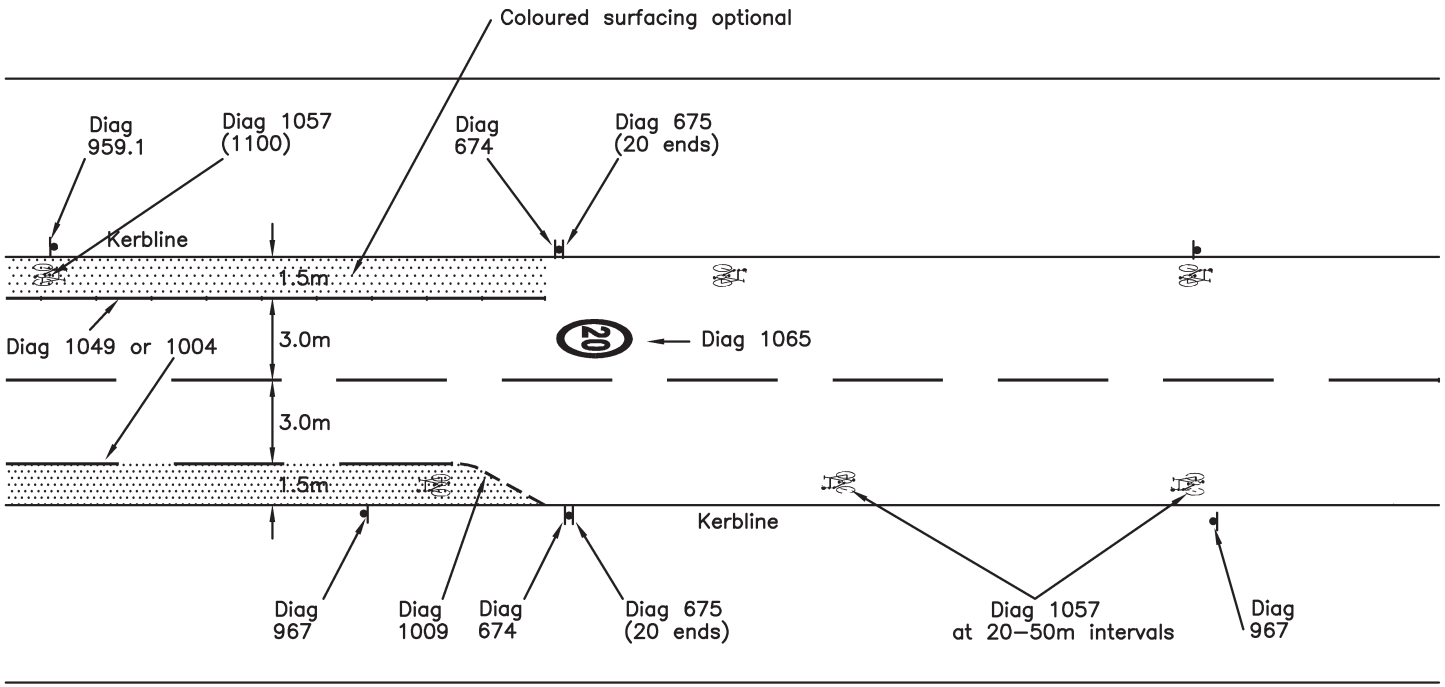

Transport for London

Cycling Centre of Excellence

Windsor House
42-50 Victoria Street
LONDON SW1H 0TL
Telephone 020 7343 5000

Date	Drawn	Checked	Approved	Title	Scale	Drawing no.	Rev.
JAN 2005	DSB	AGB	JL	20 MPH ON-CARRIAGEWAY (LANES TERMINATED)	NTS	CCE/A5	

Notes

1. All dimensions in mm unless otherwise stated

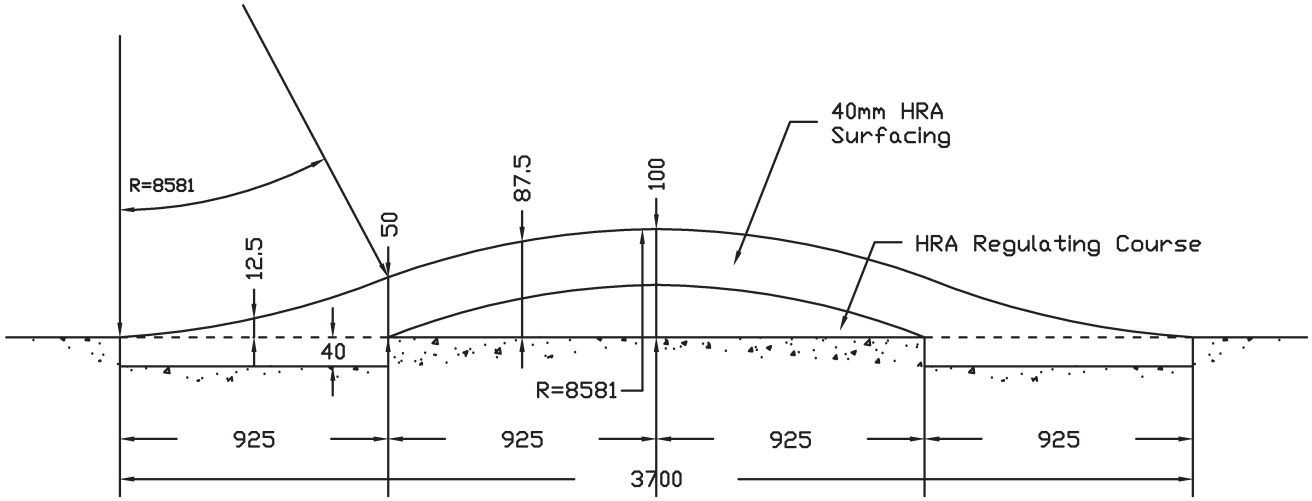

A. 100mm High Hump

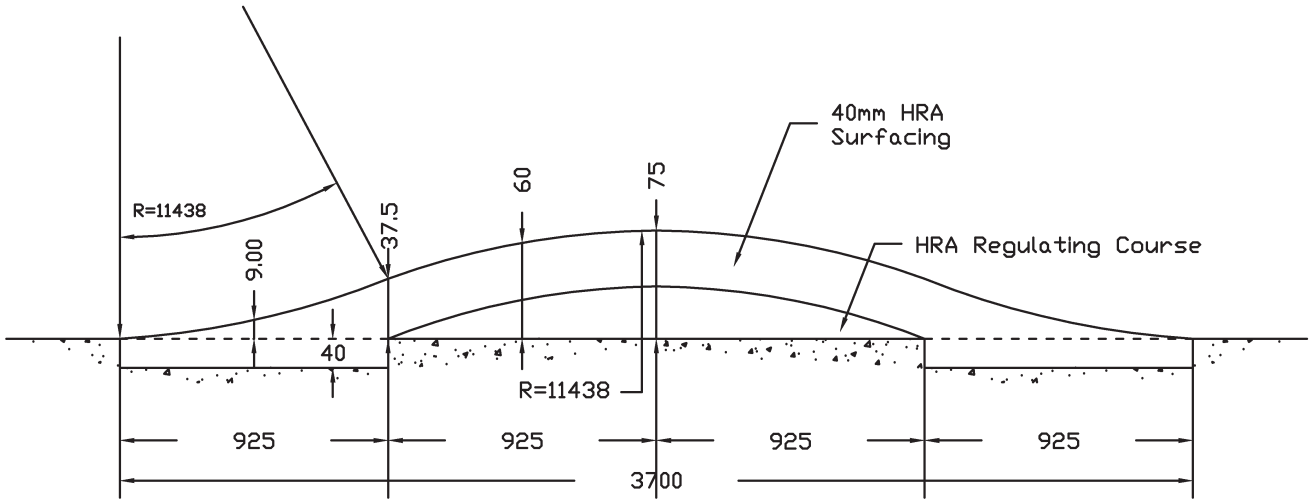

B. 75mm High Hump

Transport for London

Cycling Centre of Excellence

Windsor House
42-50 Victoria Street
LONDON SW1H 0TL
Telephone 020 7343 5000

Date	Drawn	Checked	Approved	Title	Scale	Drawing no.	Rev.
JAN 2005	DSB	AGB	JL	SINUSOIDAL PROFILE ROAD HUMP	NTS	CCE/A6	

Notes

1. All dimensions in mm unless otherwise stated

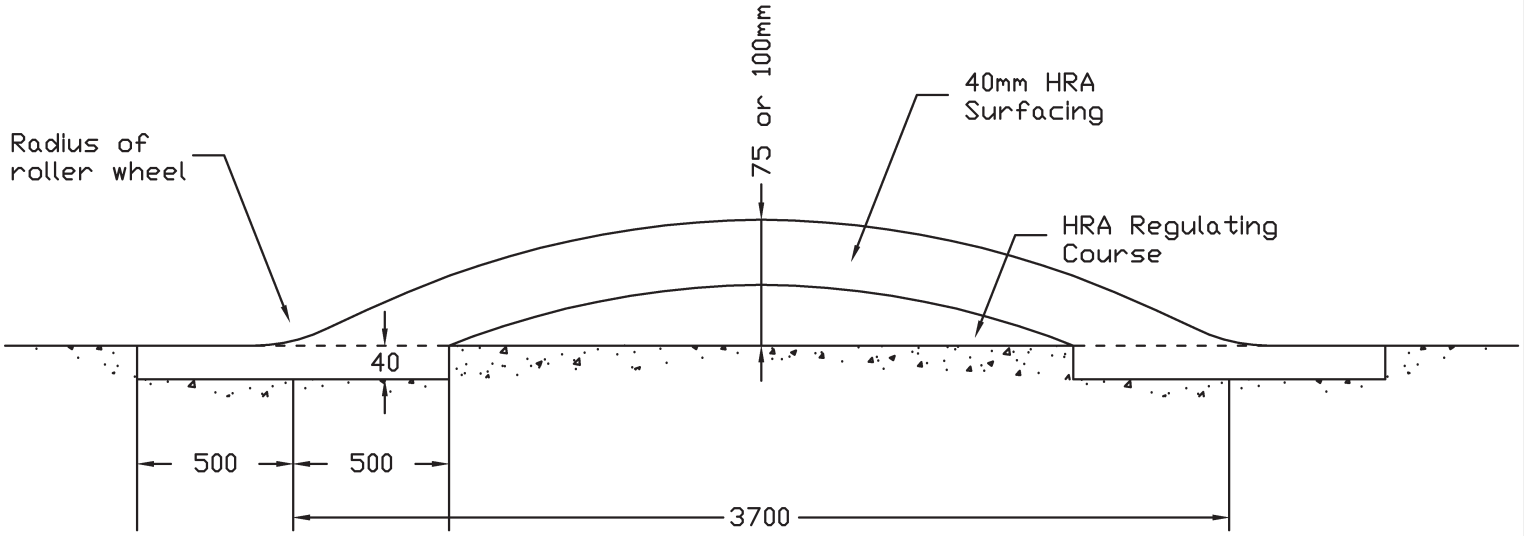

Transport for London

Cycling Centre of Excellence

Windsor House
42-50 Victoria Street
LONDON SW1H 0TL
Telephone 020 7343 5000

Date	Drawn	Checked	Approved	Title	Scale	Drawing no.	Rev.
JAN 2005	DSB	AGB	JL	ROAD HUMP - SMOOTH ENTRY PROFILE	NTS	CCE/A7	

Notes

1. All dimensions in mm unless otherwise stated
2. Consideration should be given to colouring all of the cycle lane
3. Number of Diag 1057 symbols may be varied with one central symbol on narrow roads, and one symbol for each lane on wider roads
4. Entry treatment may be incorporated as shown on CCE/A3
5. Diag 962.1 signs should not normally be used except where lanes are contra-flow.
6. Diag 1010 markings must conform to TSRGD or have site approval
7. Buff blister tactile may be replaced with contrasting grey blister tactile

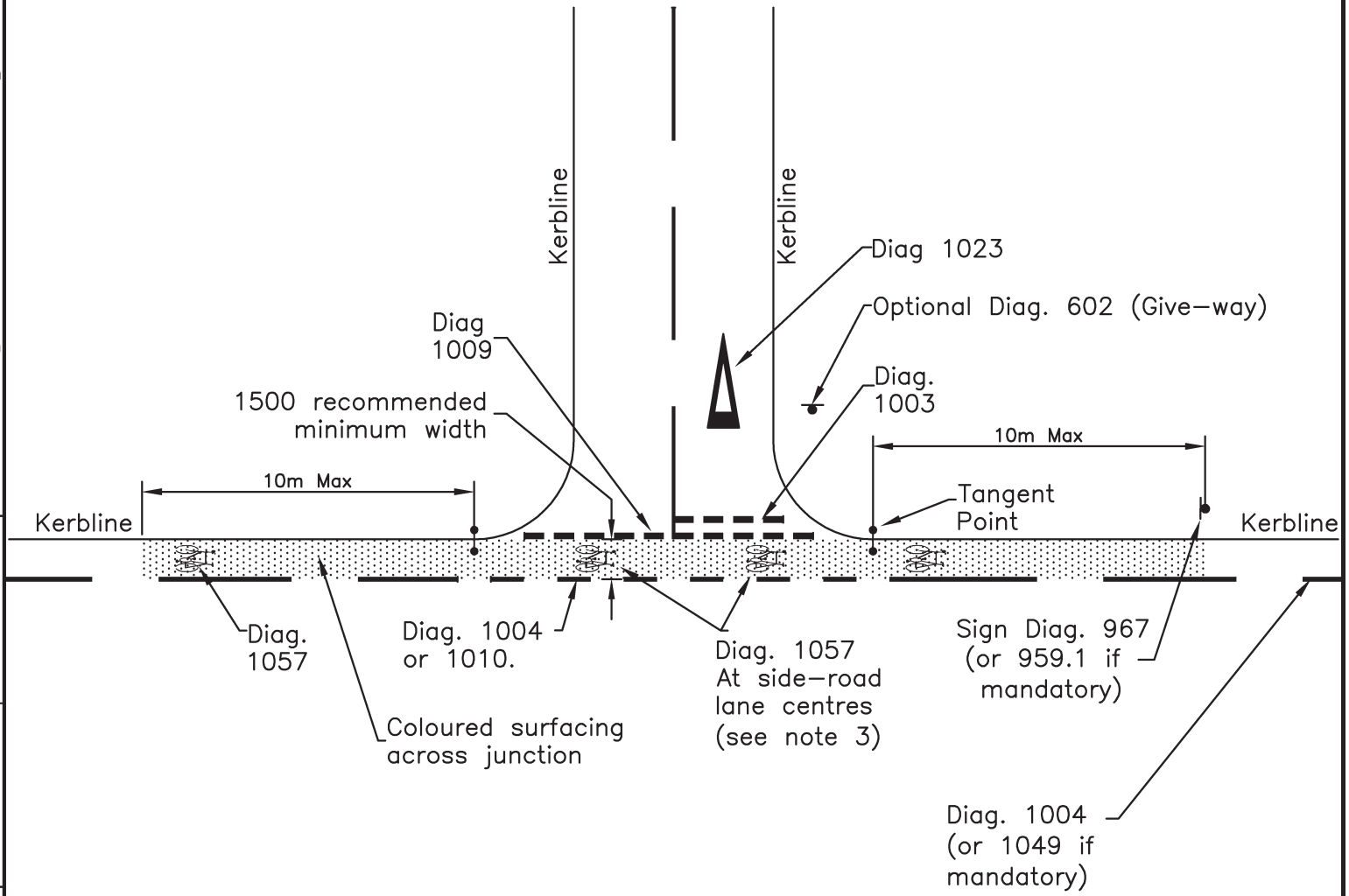

Transport for London

Cycling Centre of Excellence

Windsor House
42-50 Victoria Street
LONDON SW1H 0TL
Telephone 020 7343 5000

Date	Drawn	Checked	Approved	Title	Scale	Drawing no.	Rev.
JAN 2005	DSB	AGB	JL	CYCLE LANES AT ROAD JUNCTIONS	NTS	CCE/B1	

Notes

1. All dimensions in mm unless otherwise stated
2. Consider entry- treatments at side road junction
3. Consider kerb build-outs if heavily parked
4. Diag 1010 markings must conform to TSRGD or have DfT site approval
5. Refer also to CCE/B9 for lanes outside parking
6. Diag 1057 spacing at 5m is recommended across junctions

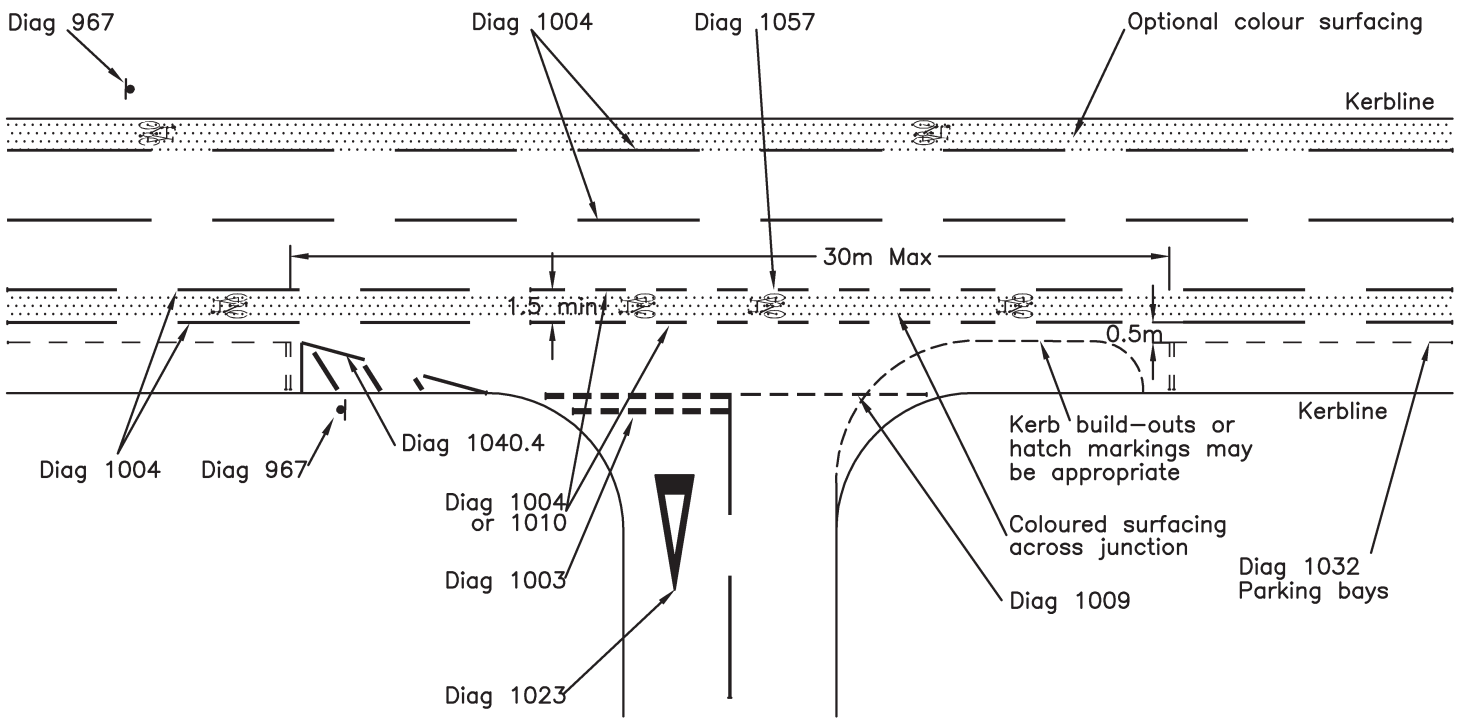

Transport for London

Cycling Centre of Excellence

Windsor House
42-50 Victoria Street
LONDON SW1H 0TL
Telephone 020 7343 5000

Date	Drawn	Checked	Approved	Title	Scale	Drawing no.	Rev.
JAN 2005	DSB	AGB	JL	CYCLE LANES AT JUNCTIONS WITH PARKED VEHICLES	NTS	CCE/B1.1	

Notes

1. All dimensions in mm unless otherwise stated
2. It is recommended that cycle lanes be continued across the junction where the alignment is difficult and where left turners may cut across cyclists, see CCE/B21.
3. Kerbside feeder lanes should preferably be as long as the queue length.
4. Kerbside feeder lanes may be mandatory.
5. See CCE/B5 for 'gate' entries.
6. Coloured surfacing recommended for all ASL boxes

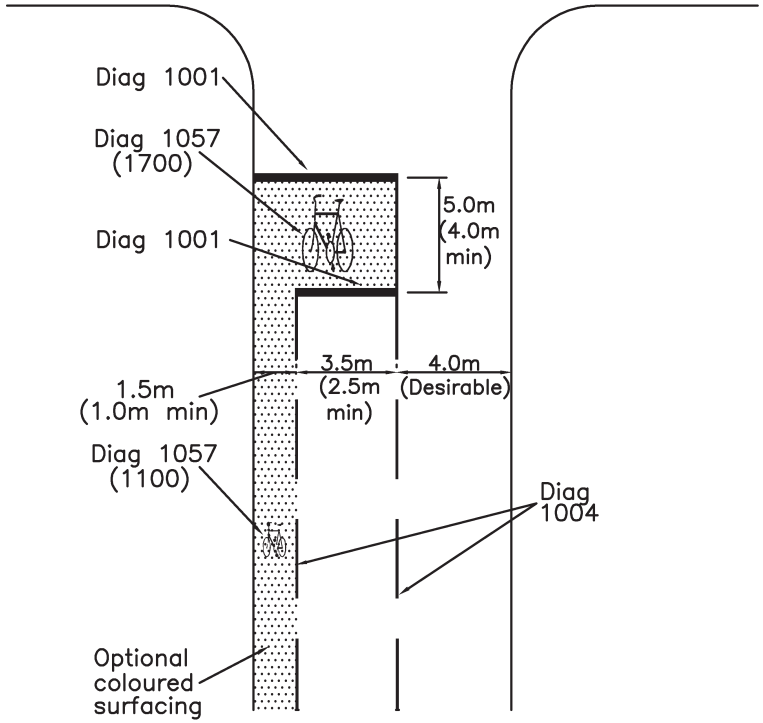

ALL TRAFFIC MOVEMENTS

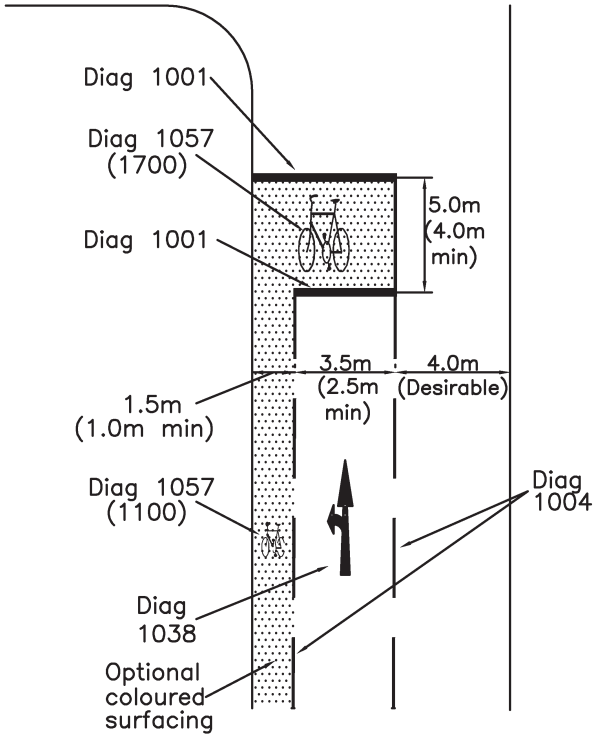

NO RIGHT TURN

Transport for London

Cycling Centre of Excellence

Windsor House
42-50 Victoria Street
LONDON SW1H 0TL
Telephone 020 7343 5000

Date	Drawn	Checked	Approved	Title	Scale	Drawing no.	Rev.
JAN 2005	DSB	AGB	JL	ADVANCED STOP LINES WITH SINGLE TRAFFIC LANE	NTS	CCE/B2	

Notes

1. All dimensions in mm unless otherwise stated.
2. It is recommended that cycle lanes be continued across the junction where the alignment is difficult and where left turners may cut across cyclists, see CCE/B21.
3. Kerbside feeder lanes may be mandatory.
4. See CCE/B5 for 'gate' entries.
5. Coloured surfacing recommended for all ASL boxes.

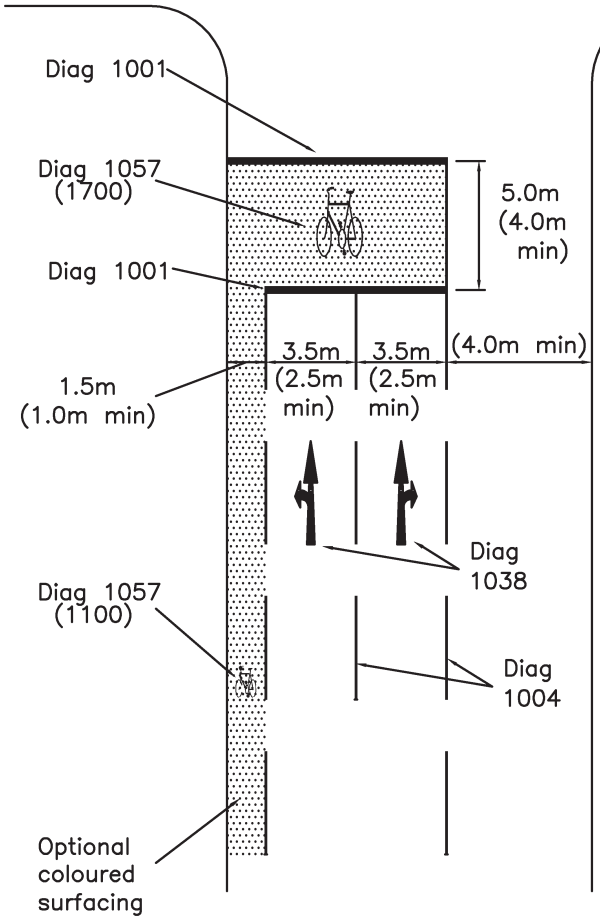

ALL TRAFFIC MOVEMENTS

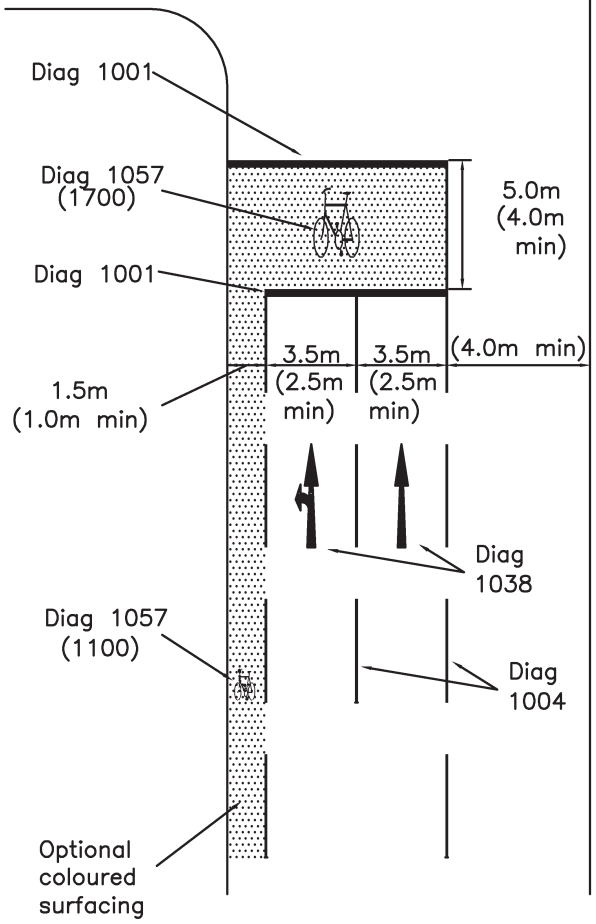

NO RIGHT TURN

Transport for London

Cycling Centre of Excellence

Windsor House
42-50 Victoria Street
LONDON SW1H 0TL
Telephone 020 7343 5000

Date	Drawn	Checked	Approved	Title	Scale	Drawing no.	Rev.
JAN 2005	DSB	AGB	JL	ADVANCED STOP LINES WITH TWO TRAFFIC LANES	NTS	CCE/B3	

Notes

1. All dimensions in mm unless otherwise stated
2. It is recommended that cycle lanes be continued across the junction where the alignment is difficult and where left turners may cut across cyclists, see CCE/B21
3. See CCE/B11 for seperate left turn lane
4. Kerbside feeder lanes may be mandatory
5. See CCE/B5 for 'gate' entries.
6. Coloured surfacing recommended for all ASL boxes and central feeder lanes

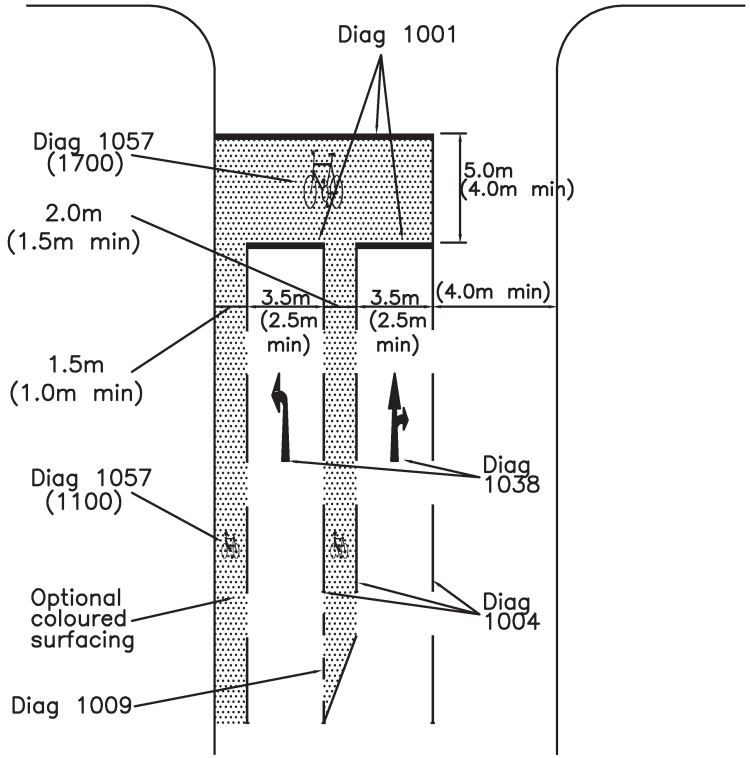

ALL TRAFFIC MOVEMENTS

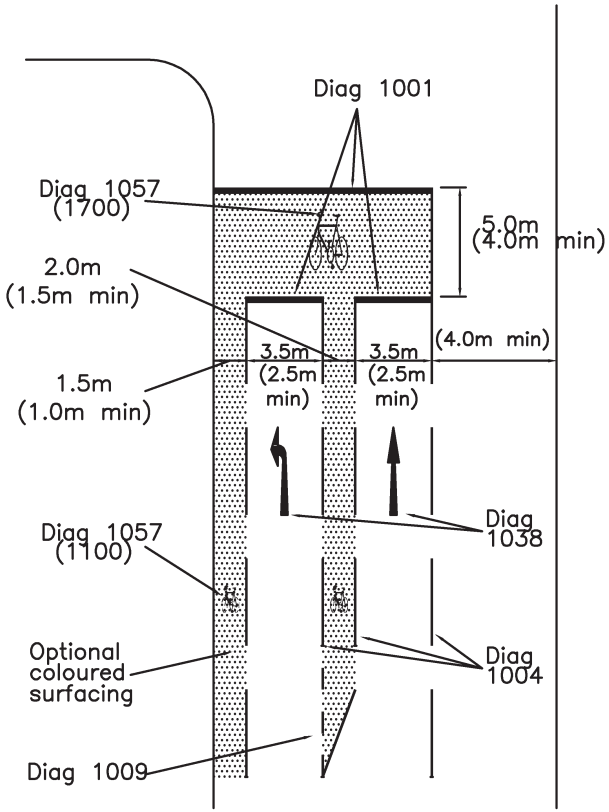

NO RIGHT TURN

Transport for London

Cycling Centre of Excellence

Windsor House
42-50 Victoria Street
LONDON SW1H 0TL
Telephone 020 7343 5000

Date	Drawn	Checked	Approved	Title	Scale	Drawing no.	Rev.
JAN 2005	DSB	AGB	JL	ADVANCED STOP LINES WITH CENTRAL AND NEAR SIDE FEEDER LANES	NTS	CCE/B4	

Notes

1. All dimensions in mm unless otherwise stated
2. It is recommended that cycle lanes be continued across the junction where the alignment is difficult and where left turners may cut across cyclists, see CCE/B21.
3. See CCE/B11 for separate left turn lane.
4. For use where low left turning cyclists (and other vehicles).
5. See CCE/B5 for 'gate' entries.
6. Coloured surfacing recommended for all ASL boxes and central feeder lanes

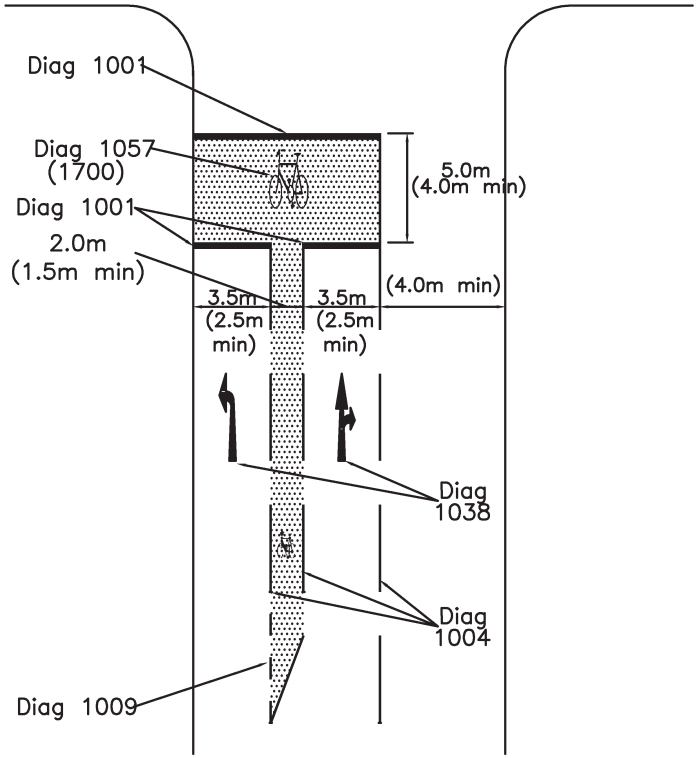

ALL TRAFFIC MOVEMENTS

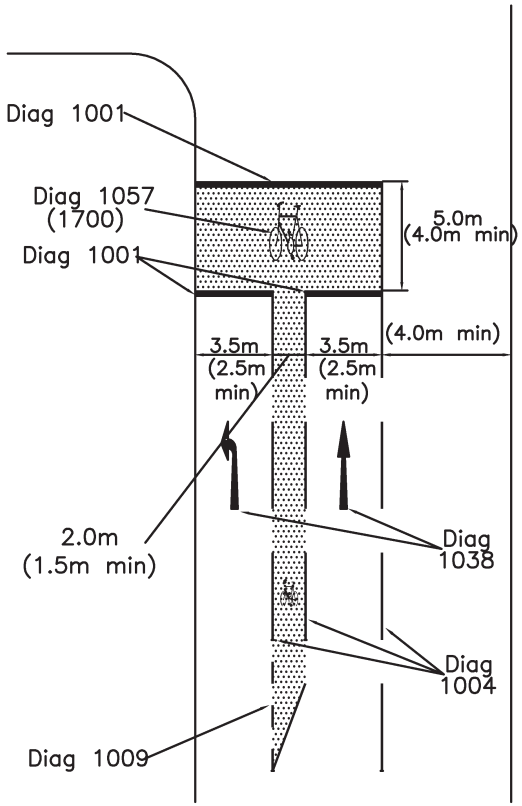

NO RIGHT TURN

Transport for London

Cycling Centre of Excellence

Windsor House
42-50 Victoria Street
LONDON SW1H 0TL
Telephone 020 7343 5000

Date	Drawn	Checked	Approved	Title	Scale	Drawing no.	Rev.
JAN 2005	DSB	AGB	JL	ADVANCED STOP LINES WITH TWO LANES AND CENTRAL FEEDER LANE	NTS	CCE/B4.1	

Notes

1. All dimensions in mm unless otherwise stated
2. May be used as variations on CCE/B2, B3, B4, B4.1
3. Cycle lanes may be continued across junctions as CCE/B21
4. Maximise nearside lane width
5. Coloured surfacing and Diagram 1057 cycle symbols may be beneficial on the approaches to the 'gates'.

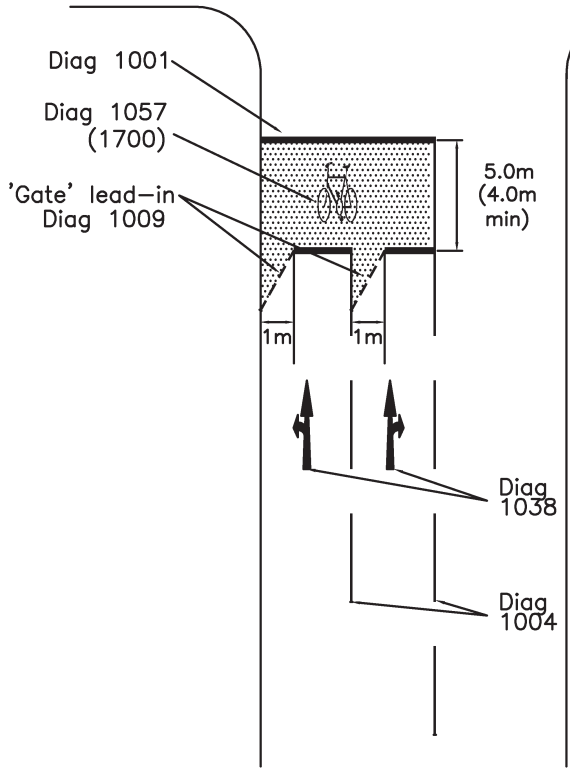

ALL TRAFFIC MOVEMENTS

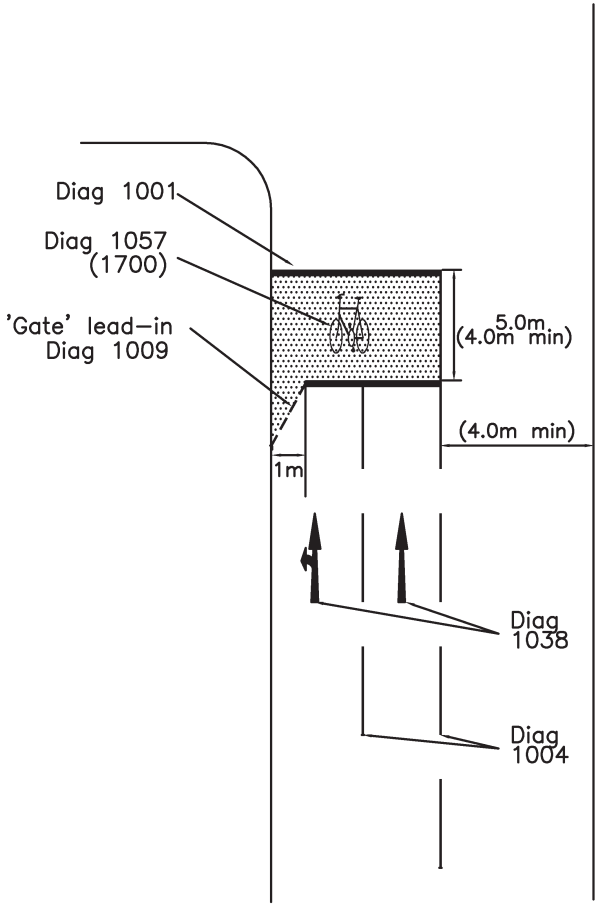

NO RIGHT TURN

Transport for London

Cycling Centre of Excellence

Windsor House
42-50 Victoria Street
LONDON SW1H 0TL
Telephone 020 7343 5000

Date	Drawn	Checked	Approved	Title	Scale	Drawing no.	Rev.
JAN 2005	DSB	AGB	JL	ADVANCED STOP LINES WITH 'GATE' LEAD-INS	NTS	CCE/B5	

Notes

1. All dimensions in mm unless otherwise stated
2. The centre line marking may be omitted where traffic flows are below 3000 vpd, see CCE/B6.1
3. One-way arrows to Diag. 1038 may be added to vehicle lanes
4. Coloured surfacing is recommended for high stress locations

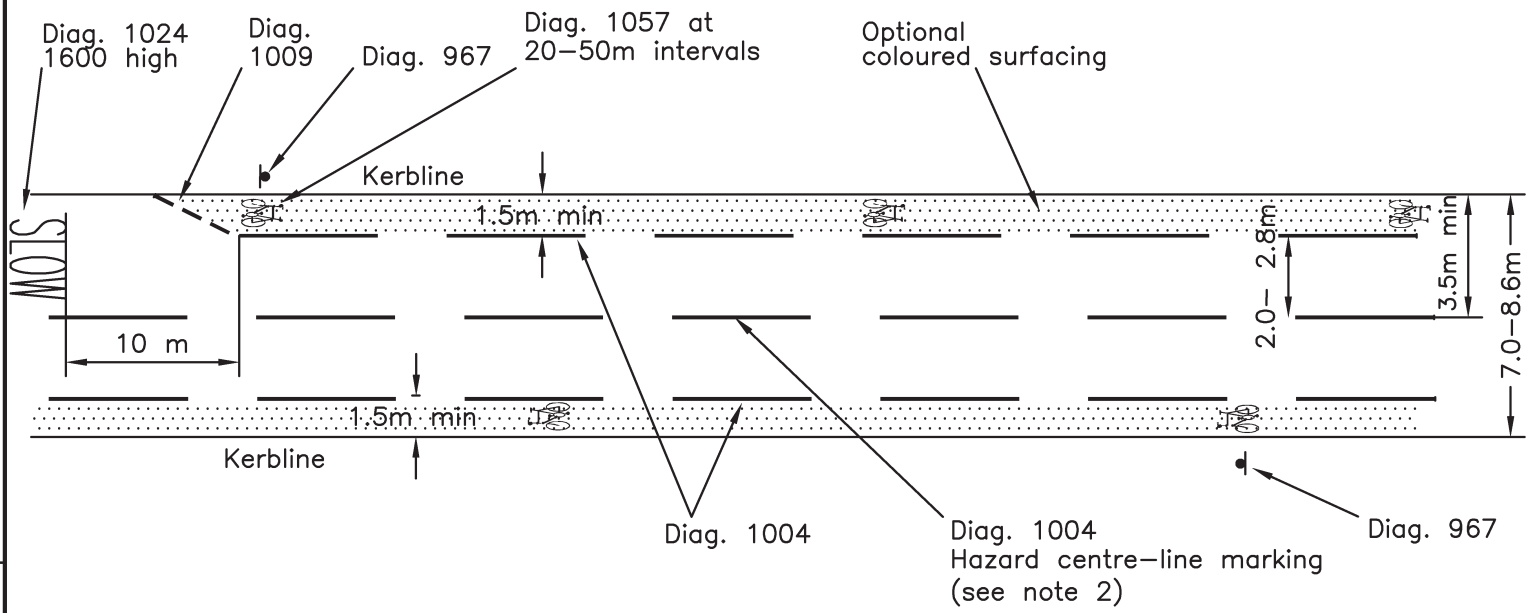

Note
For use where two–way vehicle flows are below 5000 per day & a 30mph speed limit is in force

Transport for London

Cycling Centre of Excellence

Windsor House
42-50 Victoria Street
LONDON SW1H 0TL
Telephone 020 7343 5000

Date	Drawn	Checked	Approved	Title	Scale	Drawing no.	Rev.
JAN 2005	DSB	AGB	JL	CYCLE LANES ON NARROW ROAD WITH CENTRE LINE	NTS	CCE/B6	

Notes

1. All dimensions in mm unless otherwise stated
2. A centre line marking may be required where traffic flows are over 3000 vpd, see CEE/B6
3. One-way arrows to Diag. 1038 may be added to show two way vehicle flow
4. Coloured surfacing is recommended for high stress locations

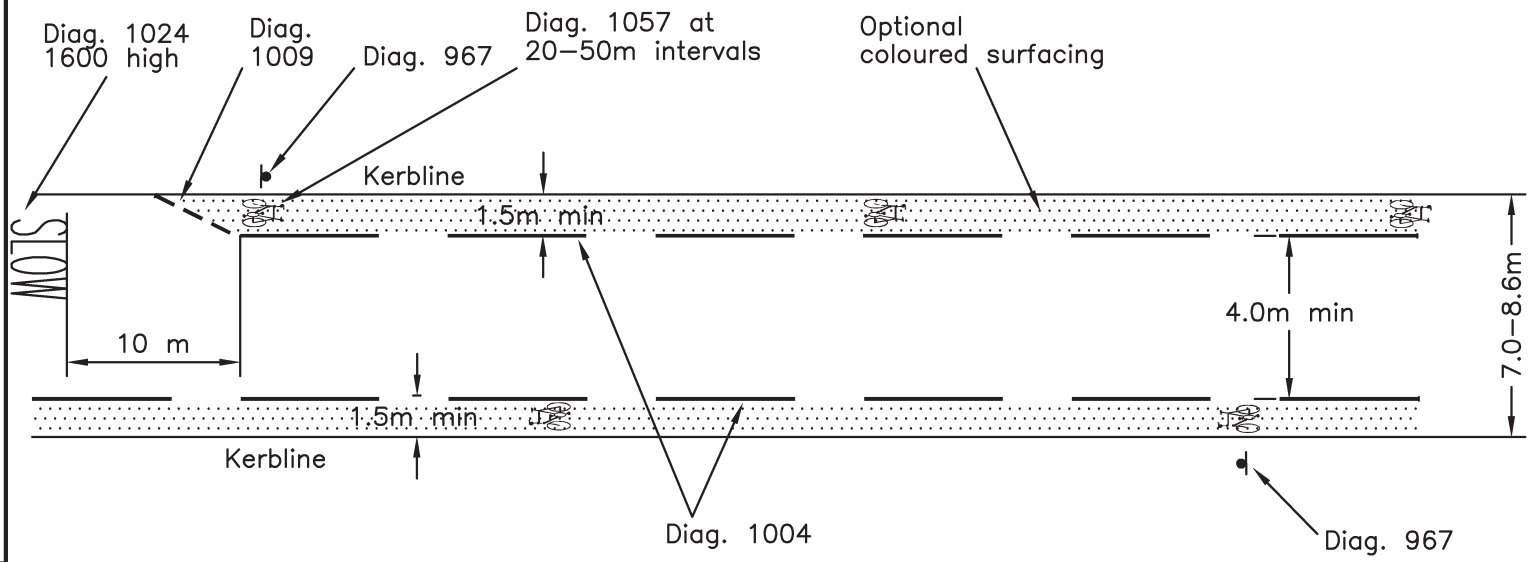

Note
For use where two–way vehicle flows are below 3000 per day & a 30mph speed limit is in force

Transport for London

Cycling Centre of Excellence

Windsor House
42-50 Victoria Street
LONDON SW1H 0TL
Telephone 020 7343 5000

Date	Drawn	Checked	Approved	Title	Scale	Drawing no.	Rev.
JAN 2005	DSB	AGB	JL	CYCLE LANES ON NARROW ROADS WITHOUT CENTRE LINE	NTS	CCE/B6.1	

Notes

1. All dimensions in mm unless otherwise stated
2. If a bus route then add 'At Any Time' waiting and loading restrictions to 10m either side of refuges.
3. Raised table may be incorporated at refuge islands.
4. Keep width of cycle lanes constant even if traffic lane is narrowed by traffic islands.
5. Pinch points should normally be 4.5-4.0m minimum.
6. Diag 1010 markings must conform to TSRGD or have DfT site approval

Type A — For new facilities a minimum gap of 4.0m is required with a preferred gap of 4.5m (LTN 2/04)

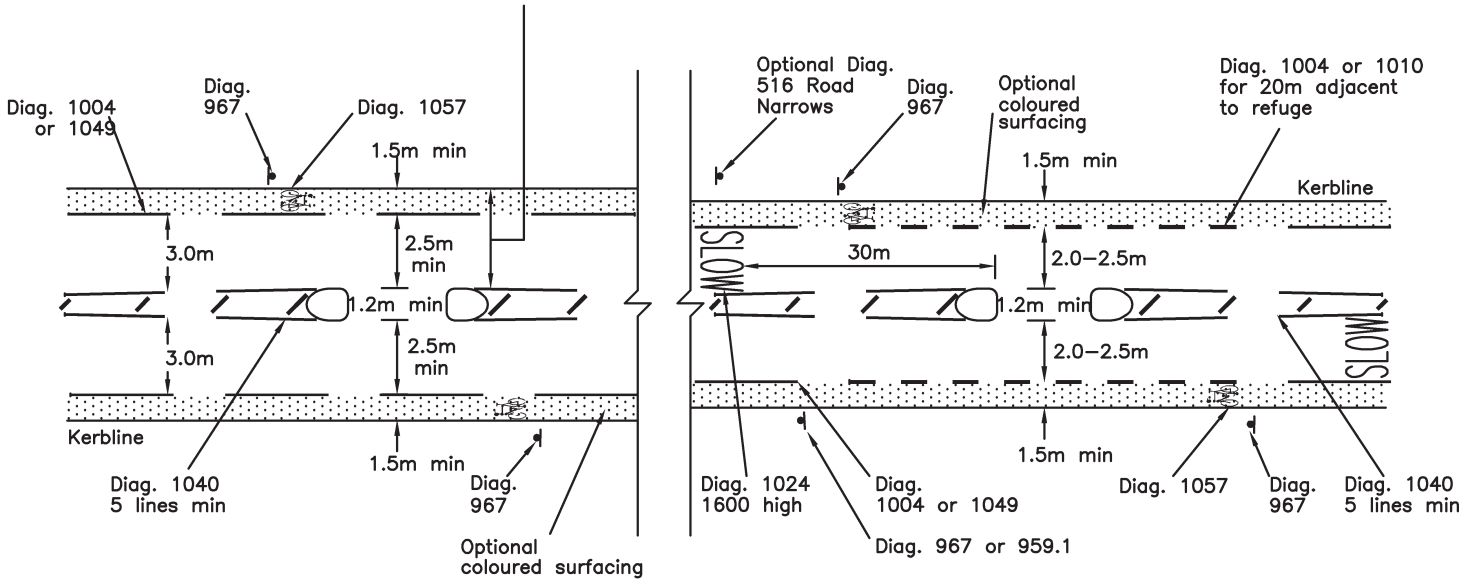

Type B — Gap width > 4.0m

Type C — Gap width 3.5–4.0m

Transport for London

Cycling Centre of Excellence

Windsor House
42-50 Victoria Street
LONDON SW1H 0TL
Telephone 020 7343 5000

Signed

Date	Drawn	Checked	Approved	Title	Scale	Drawing no.	Rev.
JAN 2005	DSB	AGB	JL	CYCLE LANES AT TRAFFIC ISLANDS	NTS	CCE/B7	

Notes

1. All dimensions in mm unless otherwise stated
2. Consider entry treatments at side road junction
3. Diag 1010 markings must conform to TSRGD or have DfT site approval

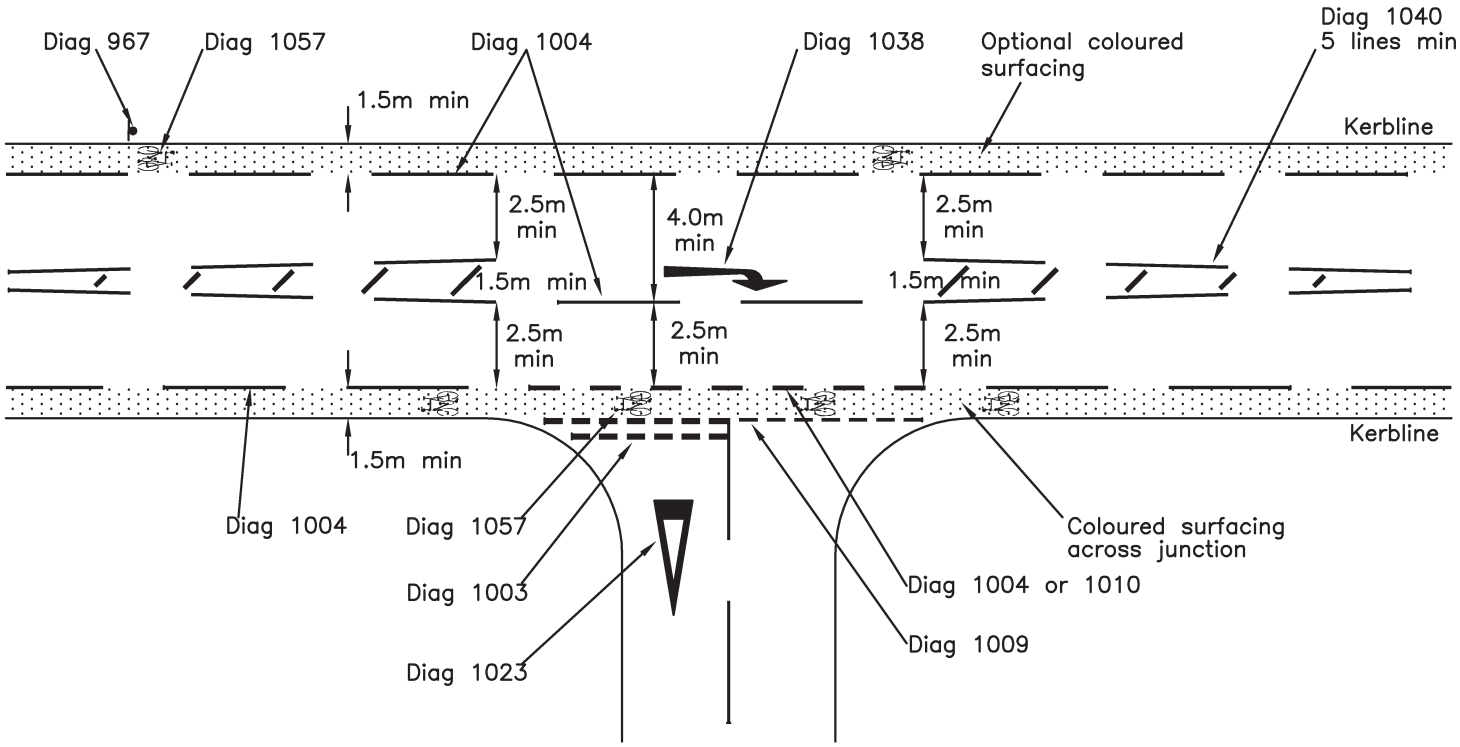

Transport for London

Cycling Centre of Excellence

Windsor House
42-50 Victoria Street
LONDON SW1H 0TL
Telephone 020 7343 5000

Date	Drawn	Checked	Approved	Title	Scale	Drawing no.	Rev.
JAN 2005	DSB	AGB	JL	CYCLE LANES AT RIGHT TURN LANES	NTS	CCE/B8	

Notes

1. All dimensions in mm unless otherwise stated
2. Gap of up to 30m between parking bays without returning cycle lane to kerb as CCE/B1.1
3. Realignment of centreline may provide better lane widths.

Type A (top) With cycle lane

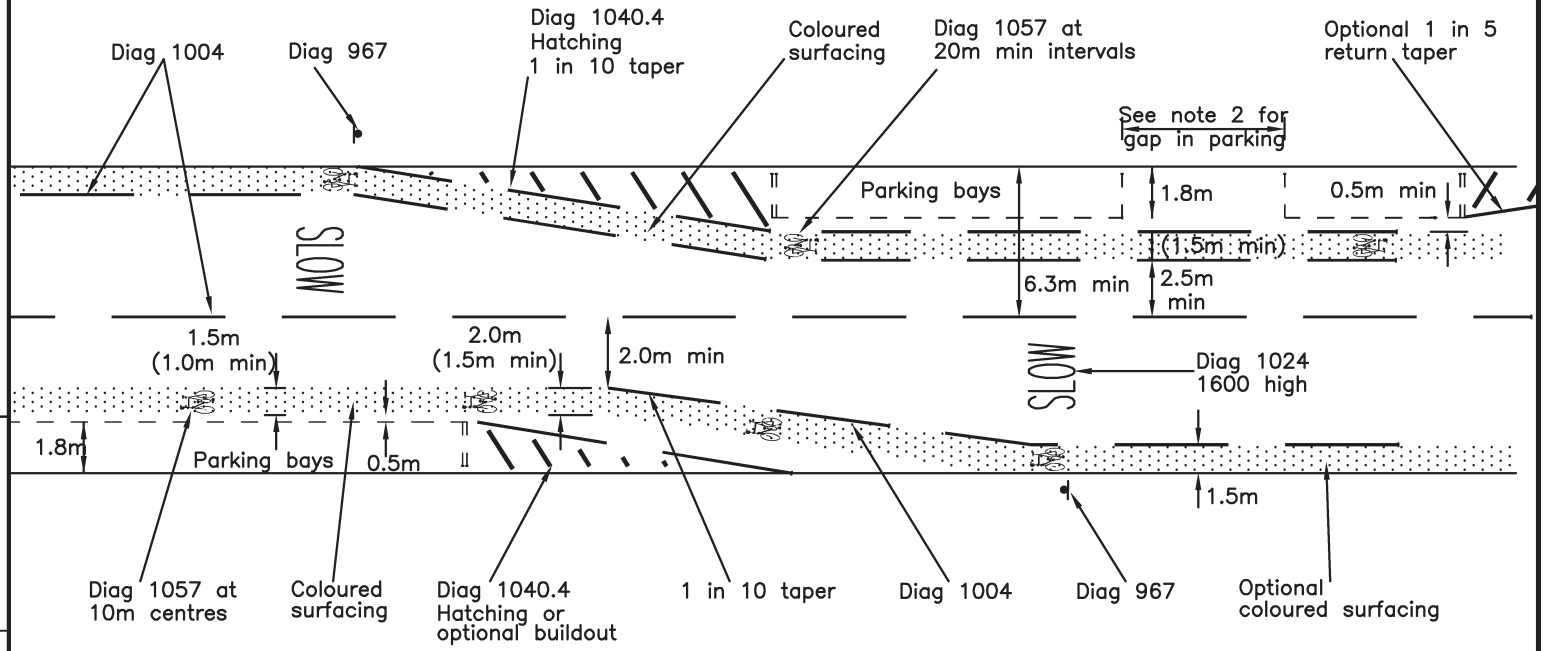

Type B (bottom) With cycle symbols but no lane

Transport for London

Cycling Centre of Excellence

Windsor House
42-50 Victoria Street
LONDON SW1H 0TL
Telephone 020 7343 5000

Date	Drawn	Checked	Approved	Title	Scale	Drawing no.	Rev.
JAN 2005	DSB	AGB	JL	CYCLE LANES AT PARKING BAYS	NTS	CCE/B9	

Notes

1. All dimensions in mm unless otherwise stated
2. Diag 962.1 is not normally required in sideroads.
3. Refer to CCE/A3 for entry treatment layout.
4. Route signage will be required.
5. Diag 1010 markings must conform to TSRGD or have DfT site approval

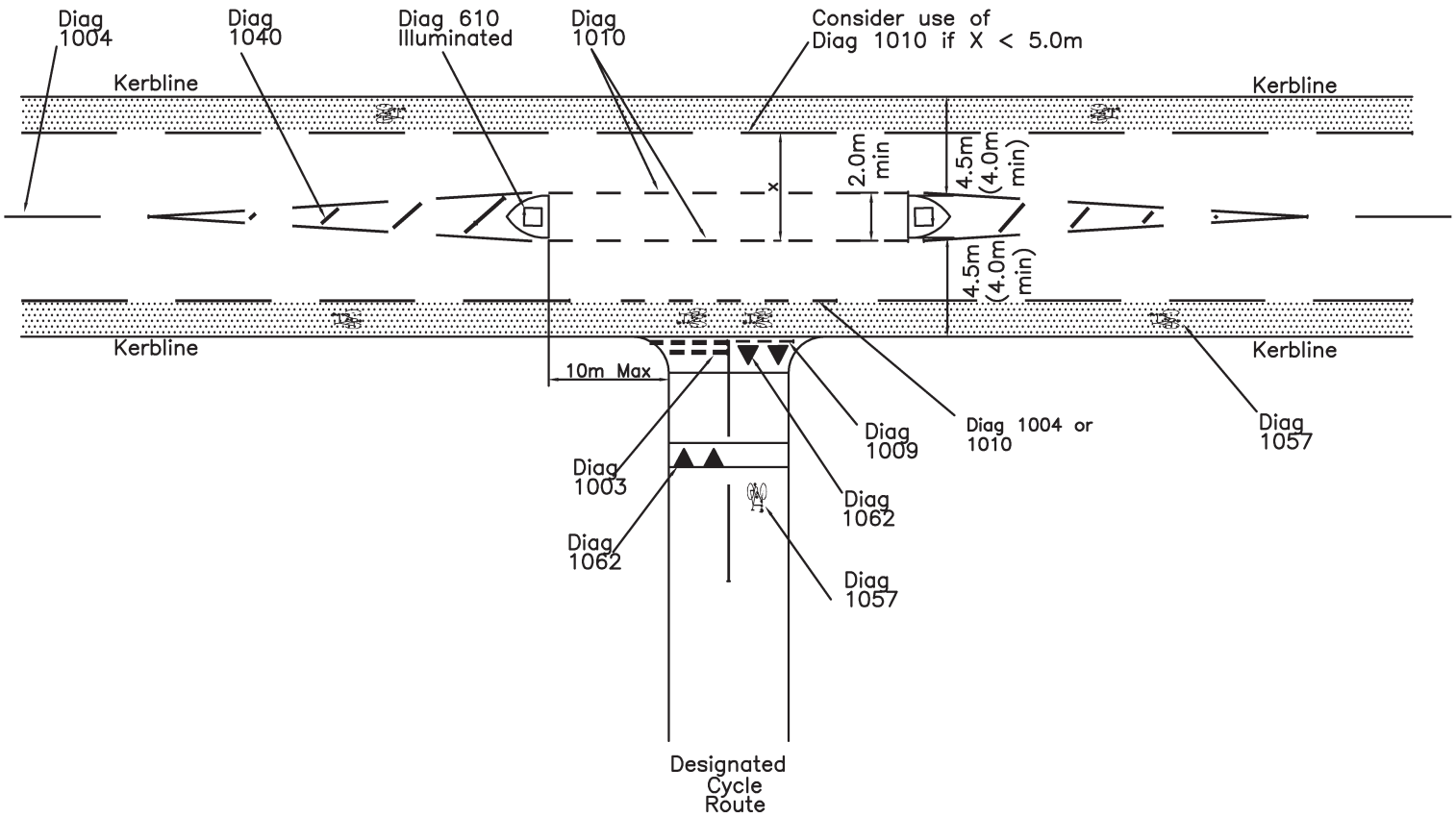

Transport for London

Cycling Centre of Excellence

Windsor House
42-50 Victoria Street
LONDON SW1H 0TL
Telephone 020 7343 5000

Date	Drawn	Checked	Approved	Title	Scale	Drawing no.	Rev.
JAN 2005	DSB	AGB	JL	CYCLE LANE JUNCTION WITH SIDE-ROAD CYCLE ROUTE	NTS	CCE/B10	

Notes

1. All dimensions in mm unless otherwise stated
2. Use Diag 1010 marking at preferred crossing point for turning vehicles, restrict their length to minimum necessary
3. Use Diag 1004 marking at other areas where vehicles may encroach
4. Use Diag 1049 and mandatory lane where vehicles should not encroach
5. Reduce lengh of slip lanes where possible dependent on flows and speed limits
6. Reduce tapers to 1 in 3 on 30mph limits and 1 in 5 on 40mph limits
7. Diag 1010 markings to conform to TSRGD or have DfT site approval

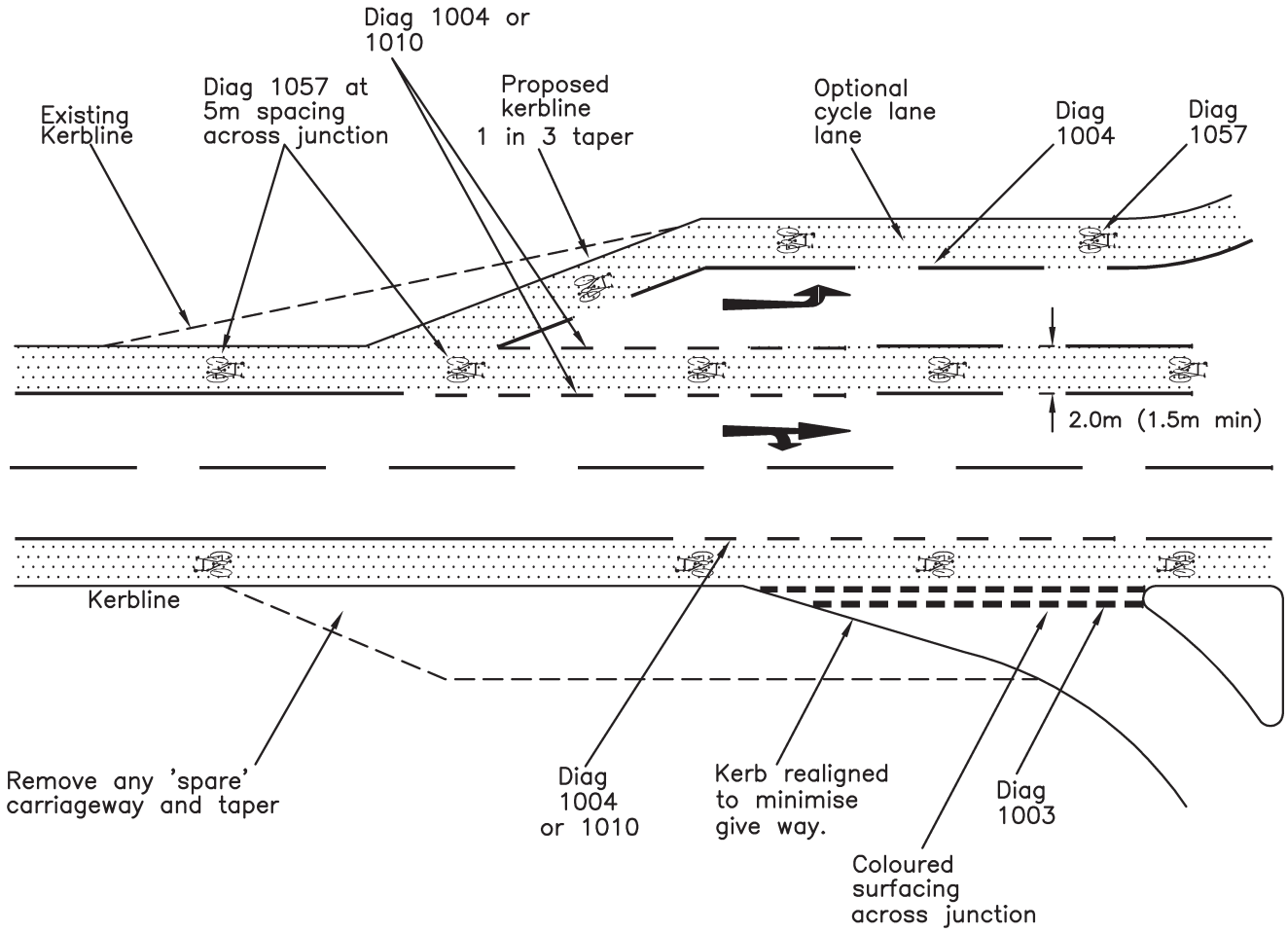

Transport for London

Cycling Centre of Excellence

Windsor House
42-50 Victoria Street
LONDON SW1H 0TL
Telephone 020 7343 5000

Date	Drawn	Checked	Approved	Title	Scale	Drawing no.	Rev.
JAN 2005	DSB	AGB	JL	CYCLE LANE AT LEFT TURN SLIP LANES (OFF AND ON)	NTS	CCE/B11	

Notes

1. All dimensions in mm unless otherwise stated
2. See LCDS 4.2 for recommended usage.
3. Raised rib markings will require DfT approval except where used as edge of carriageway markings.
4. Add appropriate waiting and loading signs and markings.
5. Cycle lane width 1.5m min in all cases.
6. Raised dividers may require DfT approval
7. Reflective road-studs are authorised for advisory lane markings (Diag 1004) but not for mandatory lanes

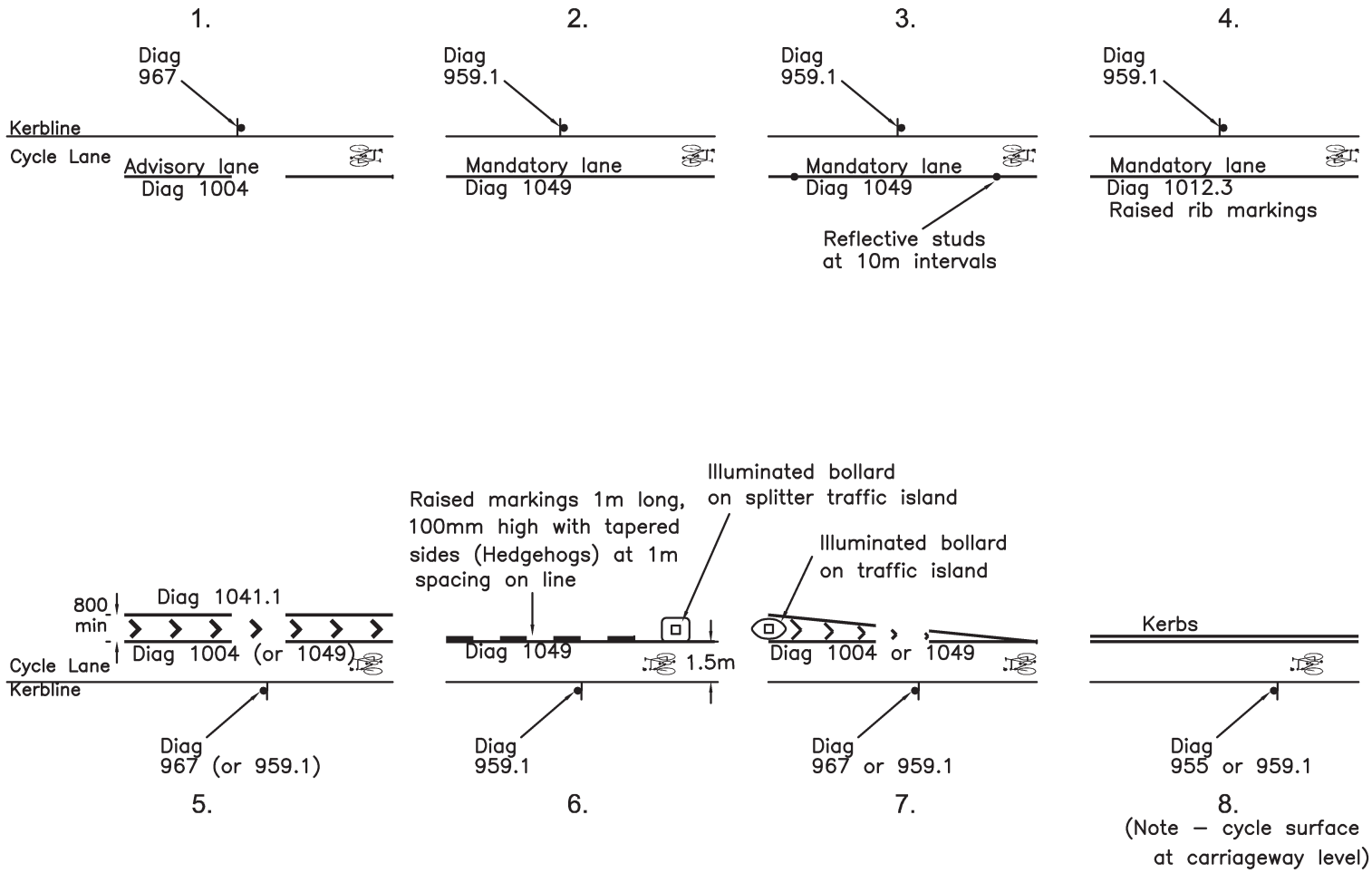

Transport for London

Cycling Centre of Excellence

Windsor House
42-50 Victoria Street
LONDON SW1H 0TL
Telephone 020 7343 5000

Date	Drawn	Checked	Approved	Title	Scale	Drawing no.	Rev.
JAN 2005	DSB	AGB	JL	CYCLE LANE SEGREGATION TYPES	NTS	CCE/B12	

Notes

1. All dimensions in mm unless otherwise stated
2. Add appropriate waiting and loading signs and markings.
3. Junction entry treatments may be appropriate.

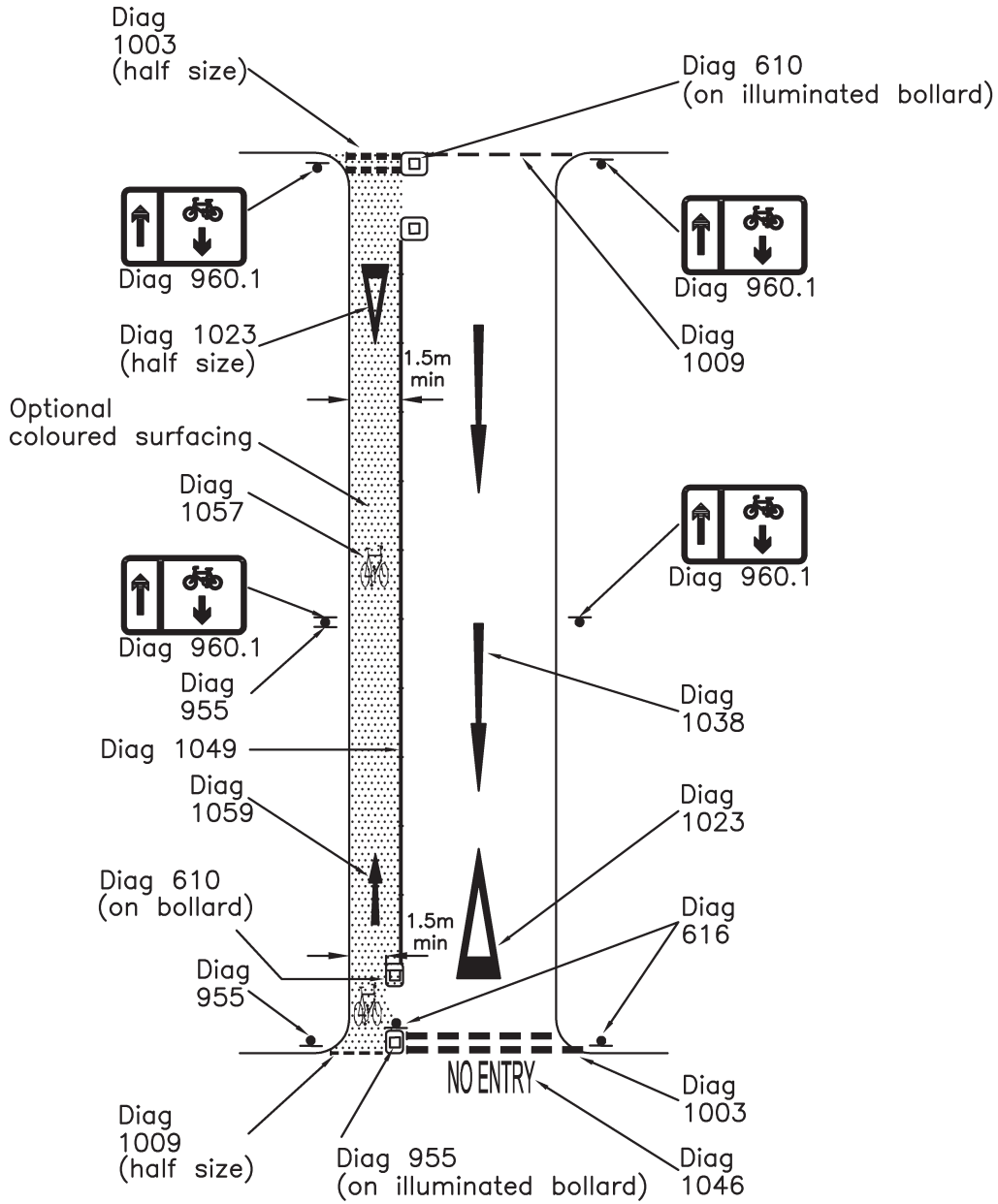

Transport for London

Cycling Centre of Excellence

Windsor House
42-50 Victoria Street
LONDON SW1H 0TL
Telephone 020 7343 5000

Date	Drawn	Checked	Approved	Title	Scale	Drawing no.	Rev.
JAN 2005	DSB	AGB	JL	MANDATORY CONTRAFLOW CYCLE LANE (WITH SEGREGATION AT ENTRY POINTS)	NTS	CCE/B13	

Notes

1. All dimensions in mm unless otherwise stated
2. Cycle lane markings may be omitted
3. Sign NP960.2 will require DfT site approval

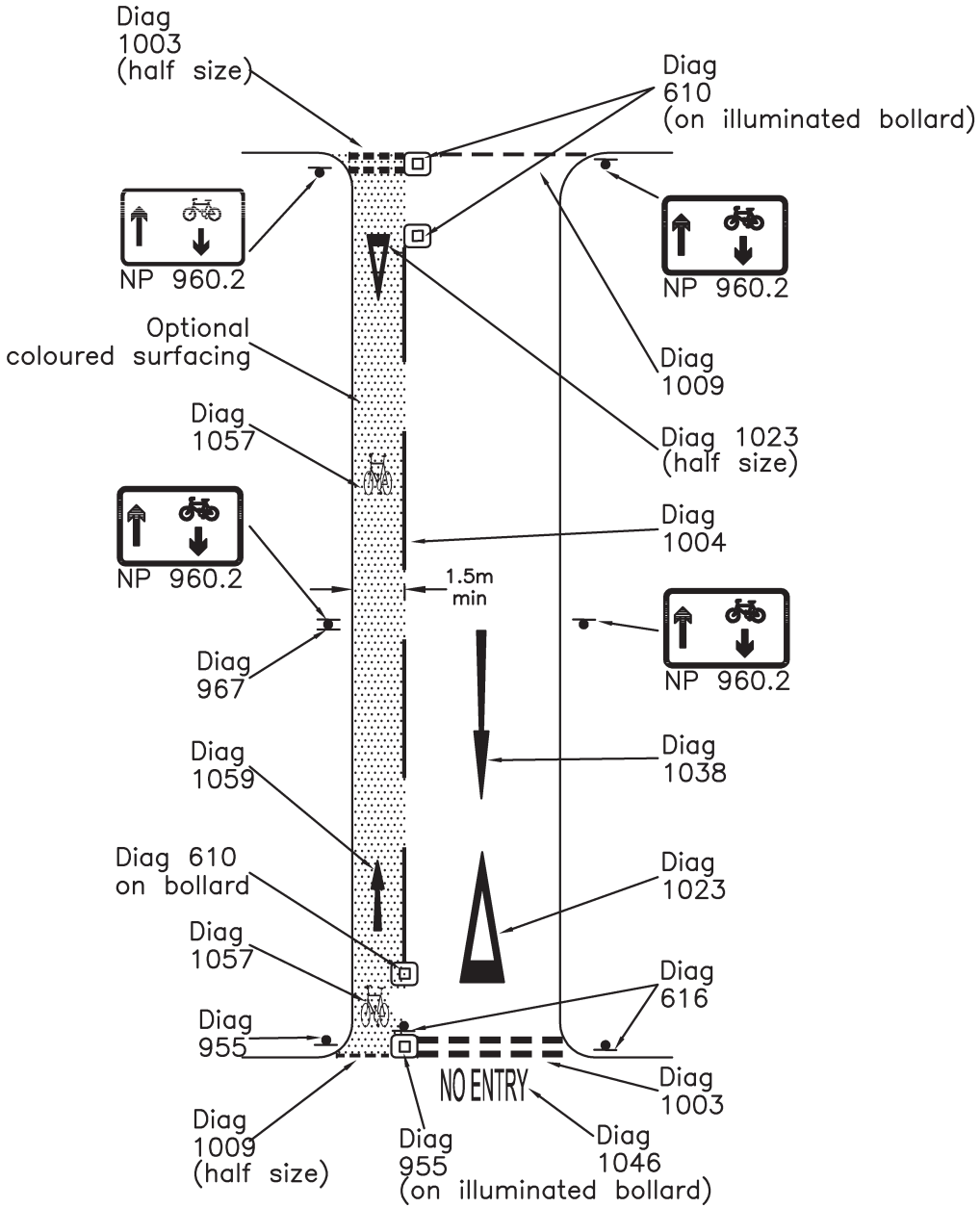

Transport for London

Cycling Centre of Excellence

Windsor House
42-50 Victoria Street
LONDON SW1H 0TL
Telephone 020 7343 5000

Date	Drawn	Checked	Approved	Title	Scale	Drawing no.	Rev.
JAN 2005	DSB	AGB	JL	ADVISORY CONTRAFLOW CYCLE LANE	NTS	CCE/B14	

Notes

1. All dimensions in mm unless otherwise stated
2. Cycle lane could be mandatory, see CCE/B13
3. Cycle lane could be part length only (away from junctions)
4. Entry treatments and traffic calming may be desirable
5. Sign NP 960.2 will require DfT site approval
6. Diag 1010 markings to conform to TSRGD or have DfT site approval

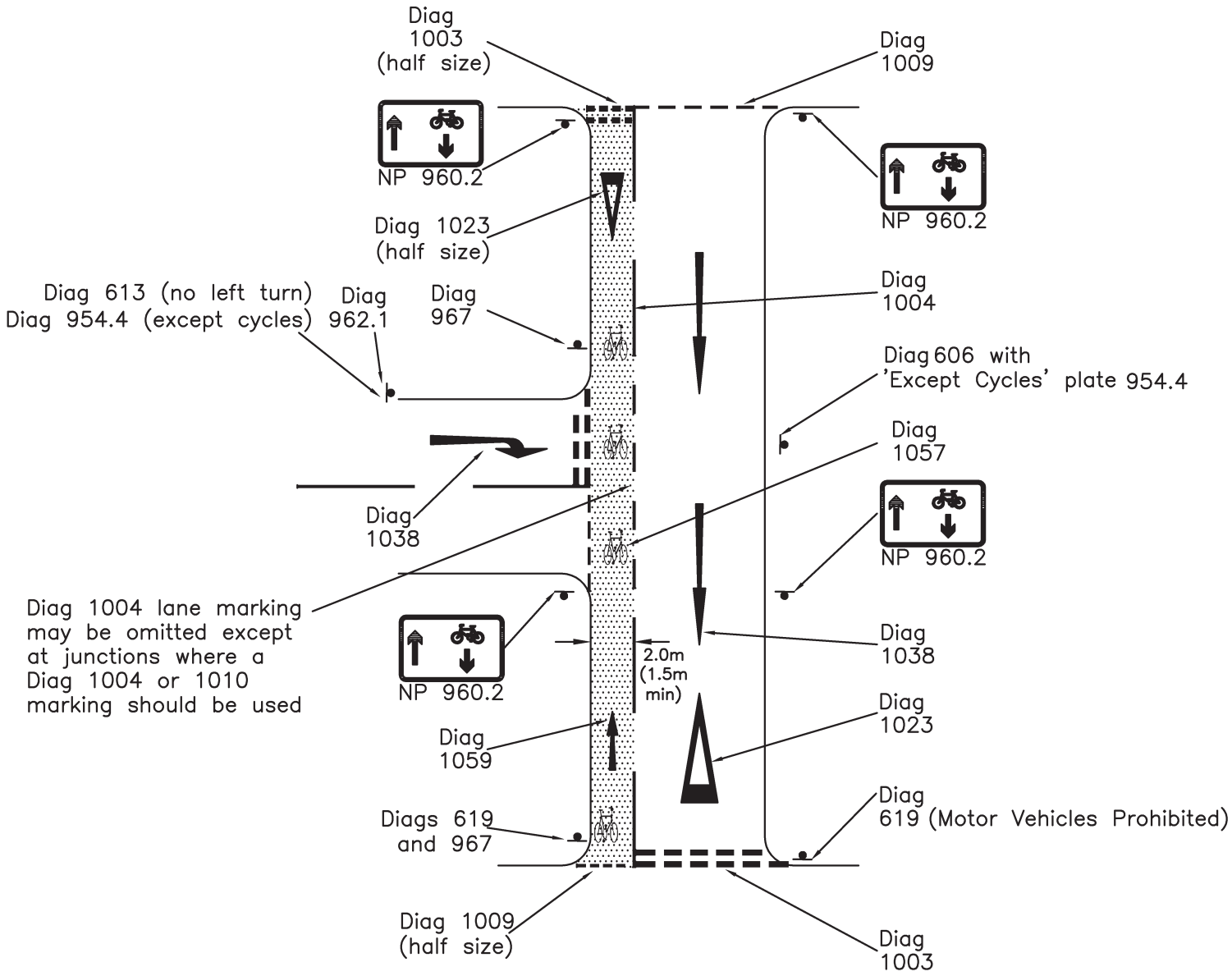

Transport for London

Cycling Centre of Excellence

Windsor House
42-50 Victoria Street
LONDON SW1H 0TL
Telephone 020 7343 5000

Date	Drawn	Checked	Approved	Title	Scale	Drawing no.	Rev.
JAN 2005	DSB	AGB	JL	CONTRAFLOW CYCLING WITH OR WITHOUT ADVISORY LANES	NTS	CCE/B15	

Notes

1. All dimensions in mm unless otherwise stated
2. Layout can also be applied at toucan crossings.
3. Zig-zag markings may be reduced from eight to two if appropriate (refer to Chapter 5)
4. Coloured surfacing is recommended at high stress locations
5. Additional line of zig-zag markings may be placed in line with cycle lane marking if cycle lane is wider than 1.5m
6. Central zig-zag markings may be omitted on roads no more than 6m wide.

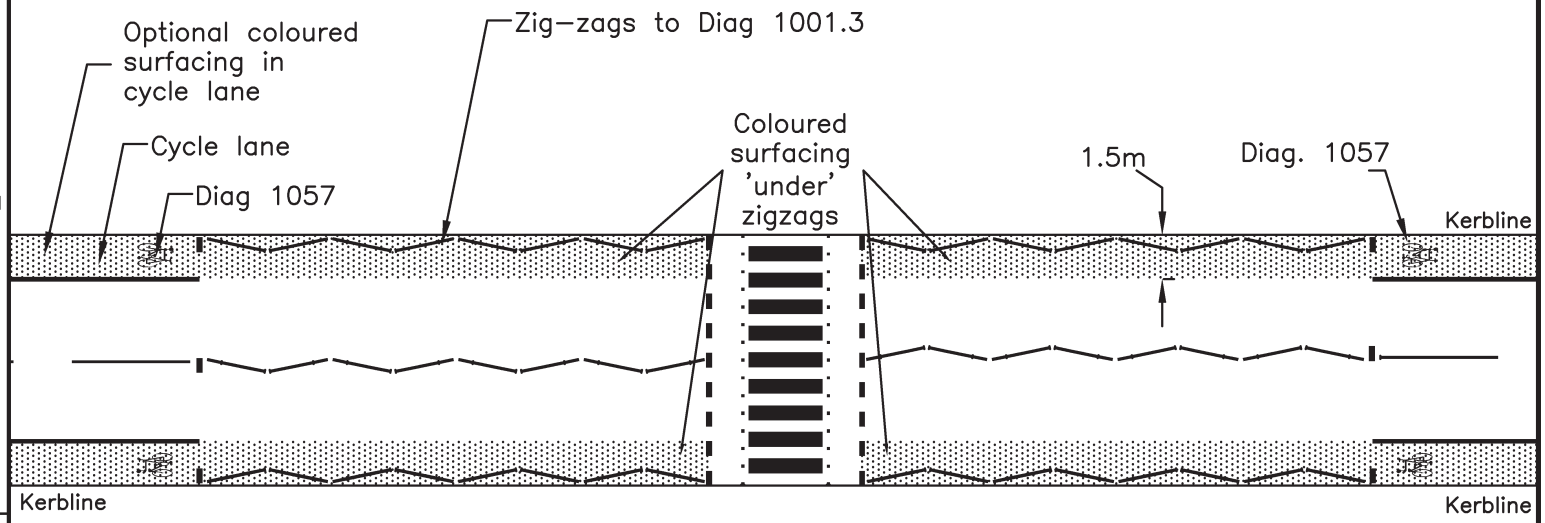

Transport for London

Cycling Centre of Excellence

Windsor House
42-50 Victoria Street
LONDON SW1H 0TL
Telephone 020 7343 5000

Date	Drawn	Checked	Approved	Title	Scale	Drawing no.	Rev.
JAN 2005	DSB	AGB	JL	CYCLE LANES AT ZIG-ZAGS ON TWO-WAY ROADS	NTS	CCE/B16	

Notes

1. All dimensions in mm unless otherwise stated
2. See also CCE/B21, B22 and S2
3. Arrows to Diag 1059 may be added if cyclists direction needs clarification.
4. Refer to LCDS for guidance on usage.
5. Diag 1010 markings must conform to TSRGD or have DfT site approval.

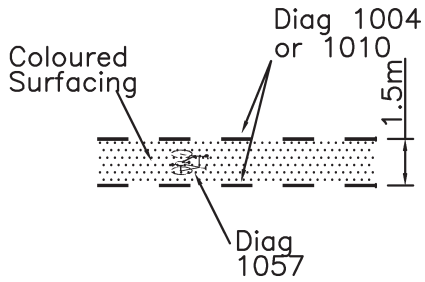

A

Guidance lane across junction

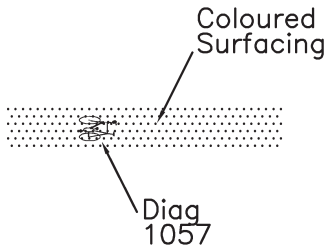

B

Coloured surface as 'virtual' lane across junction

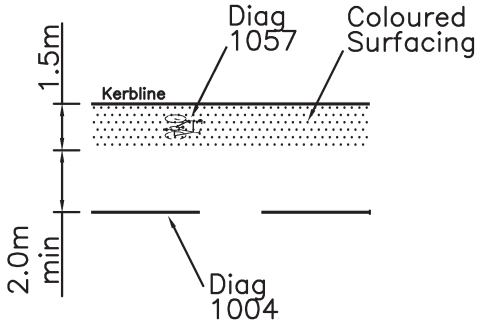

C

Coloured surface adjacent to kerb as 'virtual' lane

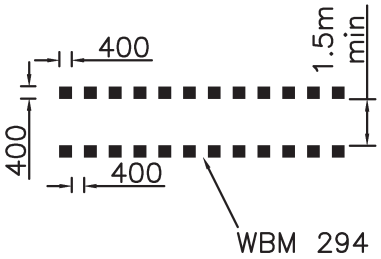

(DfT approval required)

D

Defined across signal controlled junctions

Transport for London

Cycling Centre of Excellence

Windsor House
42-50 Victoria Street
LONDON SW1H 0TL
Telephone 020 7343 5000

Date	Drawn	Checked	Approved	Title	Scale	Drawing no.	Rev.
JAN 2005	DSB	AGB	JL	MARKINGS & COLOURED SURFACING FOR GUIDANCE	NTS	CCE/B20	

Notes

1. All dimensions in mm unless otherwise stated
2. For use at high-stress locations where routes may be intimidating or difficult to follow one or more 'lanes' may be added.
3. Space Diag 1057 symbols for guidance and on line of turning motor vehicles.
4. Additional Diag 1057 markings may be used.
5. Diag 1010 markings must conform to TSRGD or have DfT site approval
6. Widths of lanes across junctions to be a minimum width of 1.5m

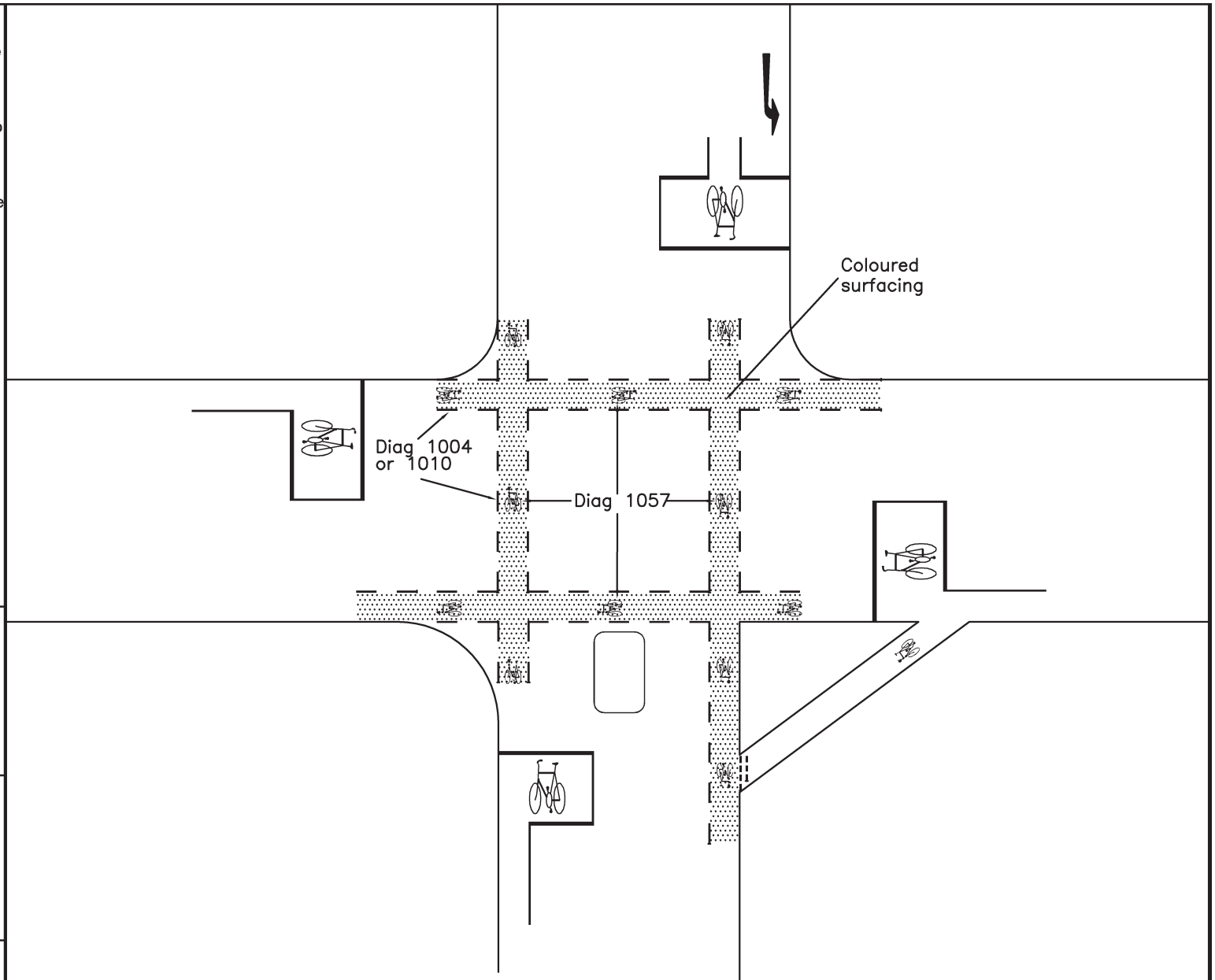

Transport for London

Cycling Centre of Excellence

Windsor House
42-50 Victoria Street
LONDON SW1H 0TL
Telephone 020 7343 5000

Date	Drawn	Checked	Approved	Title	Scale	Drawing no.	Rev.
JAN 2005	DSB	AGB	JL	CYCLE LANES CONTINUOUS THROUGH SIGNAL CONTROLLED JUNCTIONS	NTS	CCE/B21	

Notes

1. All dimensions in mm unless otherwise stated
2. See London Cycle Design Standards for recommended path widths.
3. Alternative kerb details are: edging (50 high); low kerb (50-100 high); or Diag 1049.1 delineator if flush surfaces to footway.

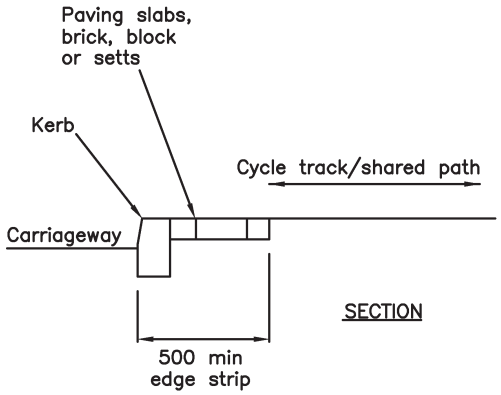

SECTION

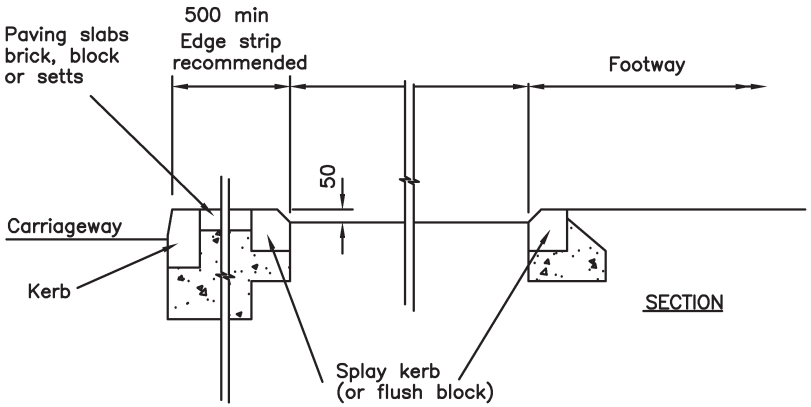

SECTION

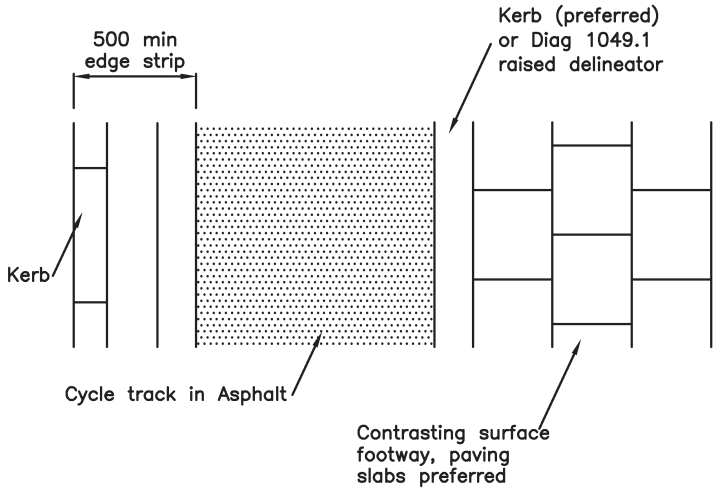

PLAN

Transport for London

Cycling Centre of Excellence

Windsor House
42-50 Victoria Street
LONDON SW1H 0TL
Telephone 020 7343 5000

Date	Drawn	Checked	Approved	Title	Scale	Drawing no.	Rev.
JAN 2005	DSB	AGB	JL	CYCLE TRACK EDGE DETAILS	NTS	CCE/C1	

Notes

1. All dimensions in mm unless otherwise stated
2. See London Cycle Design Standards for recommended track width
3. Provide entry/exit radii of 2m or more where possible
4. Diag 1008 centreline markings may be used 50mm wide subject to DfT approval

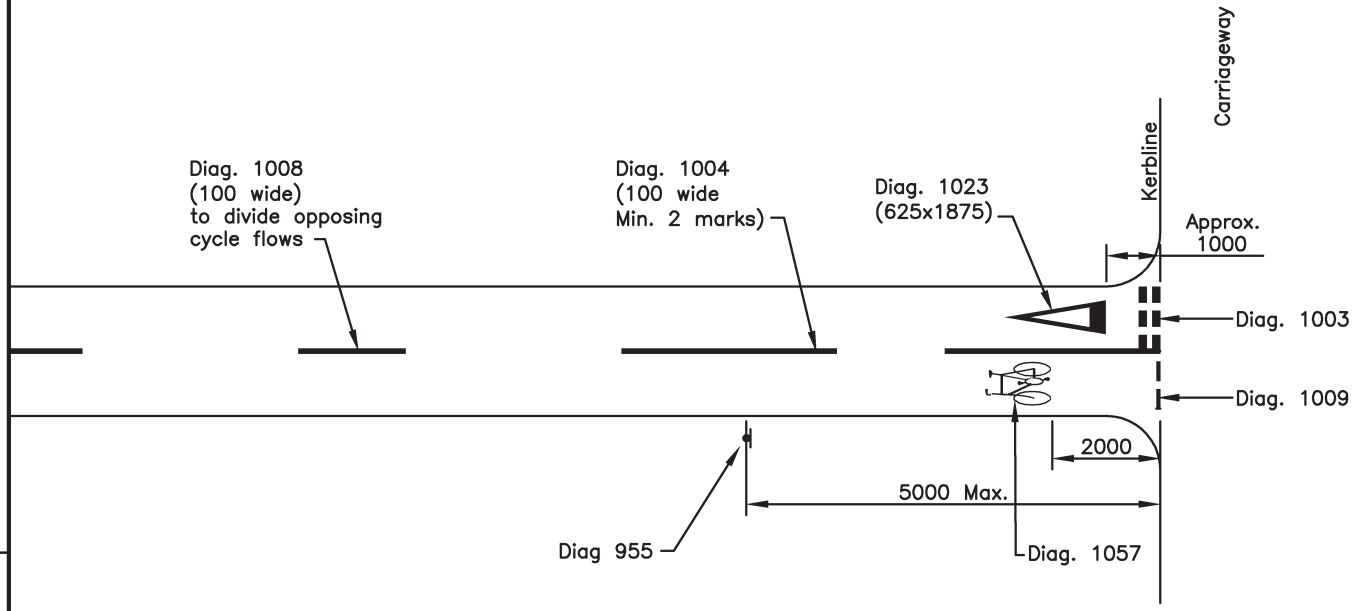

Transport for London

Cycling Centre of Excellence

Windsor House
42-50 Victoria Street
LONDON SW1H 0TL
Telephone 020 7343 5000

Date	Drawn	Checked	Approved	Title	Scale	Drawing no.	Rev.
JAN 2005	DSB	AGB	JL	CYCLE TRACK AT ROAD JUNCTIONS (NOT CYCLE PRIORITY)	NTS	CCE/C2	

Notes

1. All dimensions in mm unless otherwise stated
2. See London Cycle Design Standards for recommended track width
3. Provide entry/exit radii of 2m or more where possible
4. Diag 1008 centreline markings may be used 50mm wide subject to DfT approval
5. Diag 1023 give way triangle marking may be added before Diag 1003

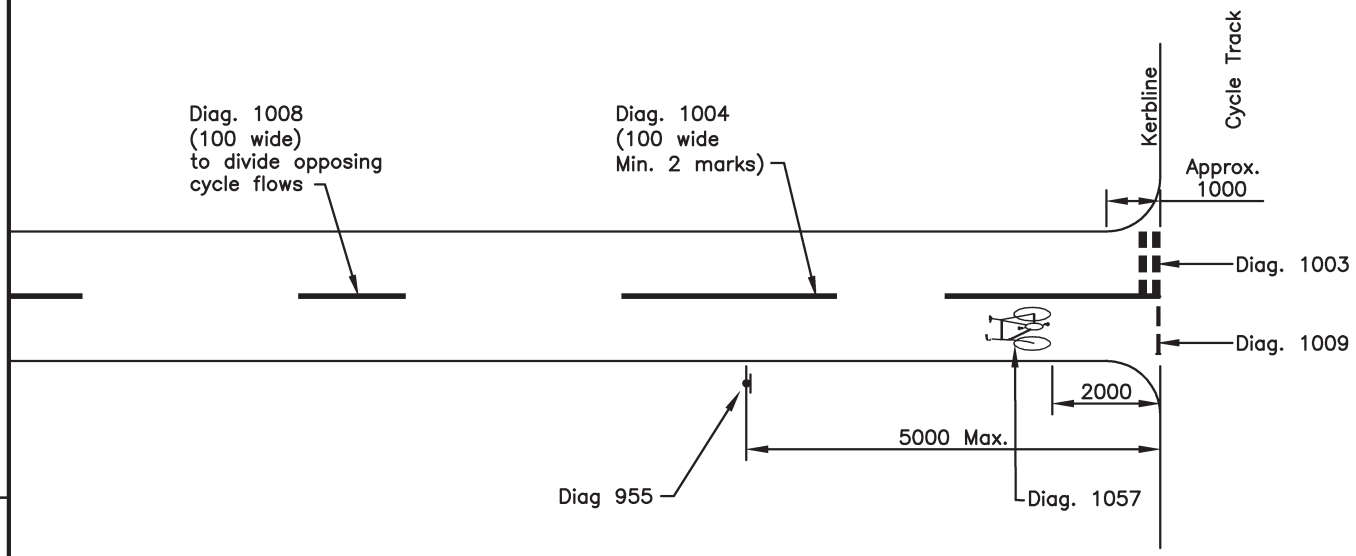

Transport for London

Cycling Centre of Excellence

Windsor House
42-50 Victoria Street
LONDON SW1H 0TL
Telephone 020 7343 5000

Date	Drawn	Checked	Approved	Title	Scale	Drawing no.	Rev.
JAN 2005	DSB	AGB	JL	CYCLE TRACK AT TRACK JUNCTIONS (NOT CYCLE PRIORITY)	NTS	CCE/C2.1	

Notes

1. All dimensions in mm unless otherwise stated
2. Wide cycleway, can incorporate a central bollard or post with Diag 955 sign, if minimum clearance is 1.5m
3. Keep clear markings to Diag 1026 or 1026.1 may be added to carriageway
4. If high levels of parking then kerb build-outs are desirable
5. Include visibility splays where possible
6. Raised tables may be included on carriageway to assist cyclists crossing
7. Tactile paving is available in different colours, so specify.
8. For further guidance refer to "Guidance on the use of Tactile Paving Surfaces."
9. Buff blister tactile may be replaced with contrasting grey blister tactile

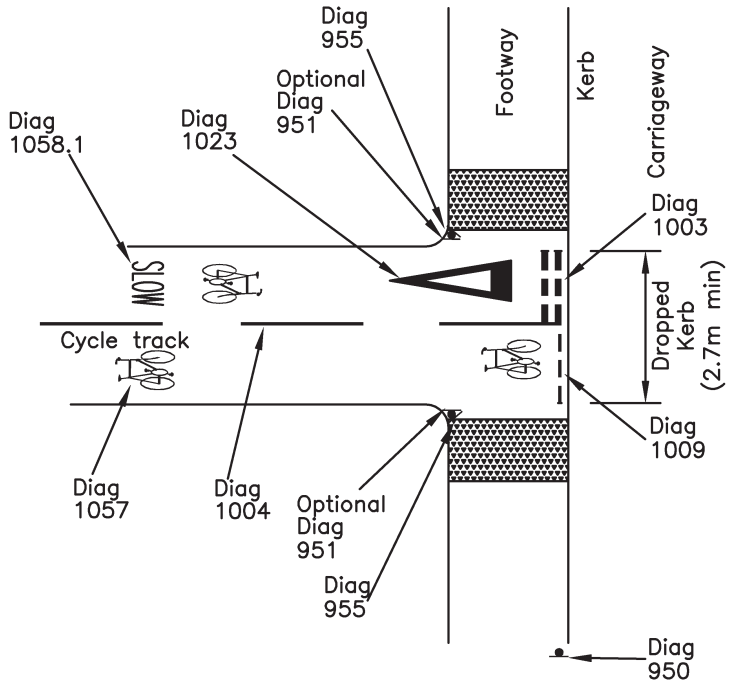

CYCLE TRACK OPTION

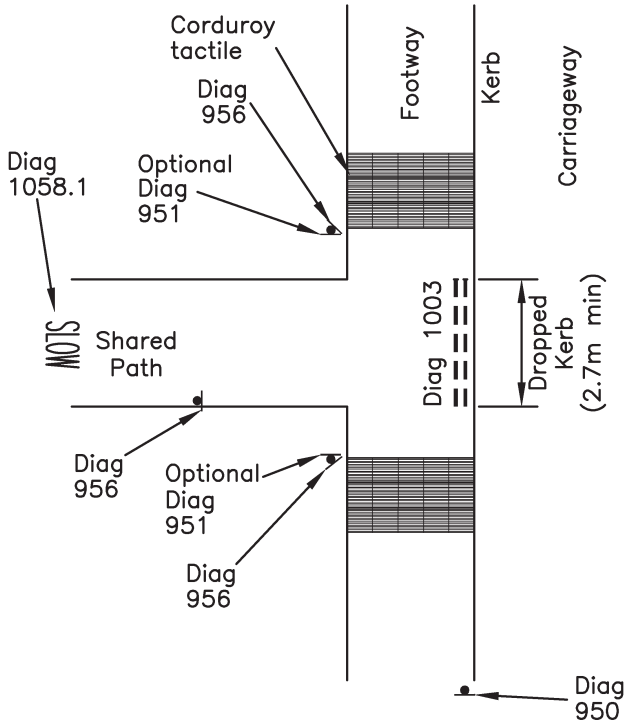

SHARED PATH OPTION

Transport for London

Cycling Centre of Excellence

Windsor House
42-50 Victoria Street
LONDON SW1H 0TL
Telephone 020 7343 5000

Date	Drawn	Checked	Approved	Title	Scale	Drawing no.	Rev.
JAN 2005	DSB	AGB	JL	CYCLEWAY CROSSING FOOTWAY TO JOIN / CROSS CARRIAGEWAY	NTS	CCE/C3	

Notes

1. All dimensions in mm unless otherwise stated
2. See also drawing CCE/C4.1 & C4.2
3. Hatching or kerb buildouts should be considered to protect cyclist exit onto carriageway lane.
4. Kerb buildouts or hatched markings should be provided where necessary.
5. For further guidance refer to "Guidance on the use of Tactile Paving Surfaces."

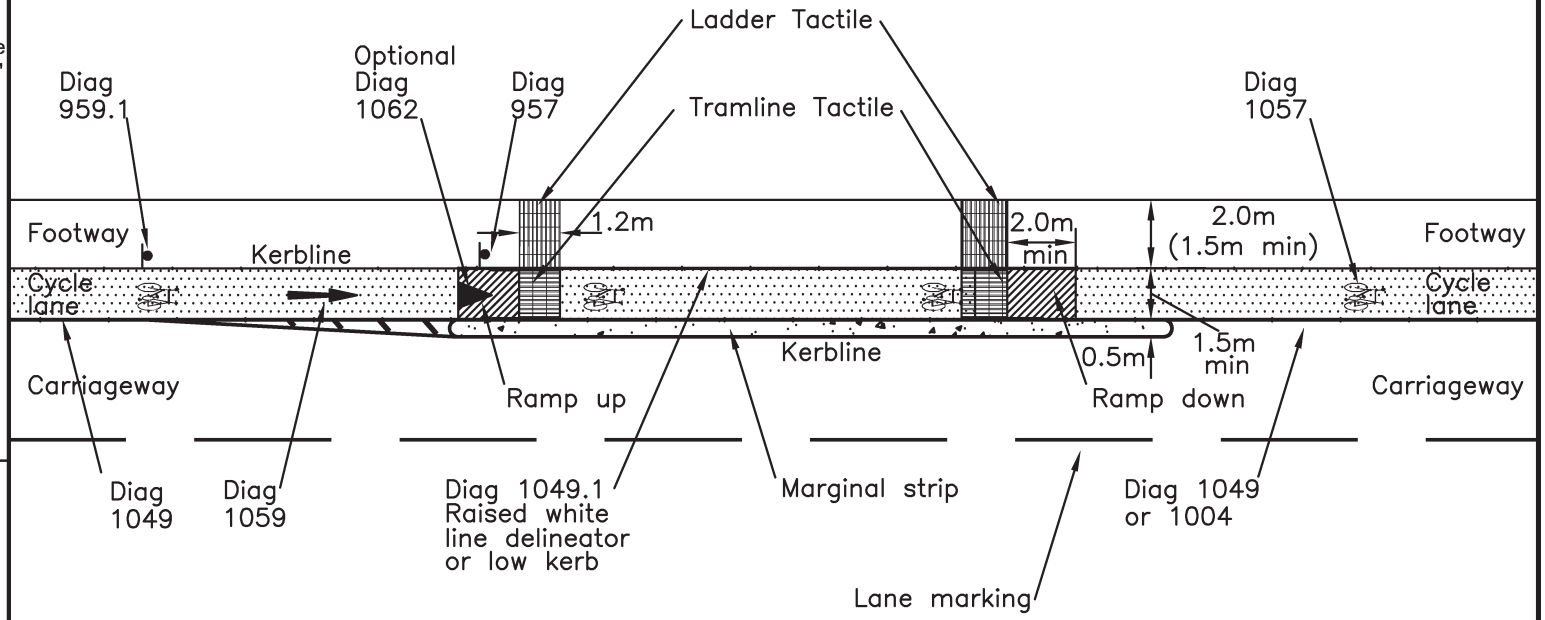

Transport for London

Cycling Centre of Excellence

Windsor House
42-50 Victoria Street
LONDON SW1H 0TL
Telephone 020 7343 5000

Date	Drawn	Checked	Approved	Title	Scale	Drawing no.	Rev.
JAN 2005	DSB	AGB	JL	ACCESS/EXIT TO SEGREGATED PATH	NTS	CCE/C4	

Notes

1. All dimensions in mm unless otherwise stated
2. See also Drawing CCE/C4
3. Hatching or Kerb buildouts should be considerded to protect cyclist exit onto carriageway lane
4. Kerb buildouts or hatched markings should be provided where necessary
5. This layout is suitable for use by Toucan crossings. See CCE/C4 for main entry/exits
6. A Diag 1023 Give-way marking should be added if there is no cycle lane
7. Cycle lanes (on carriageway) may be omitted
8. For further guidance refer to "Guidance on the use of Tactile Paving Surfaces."

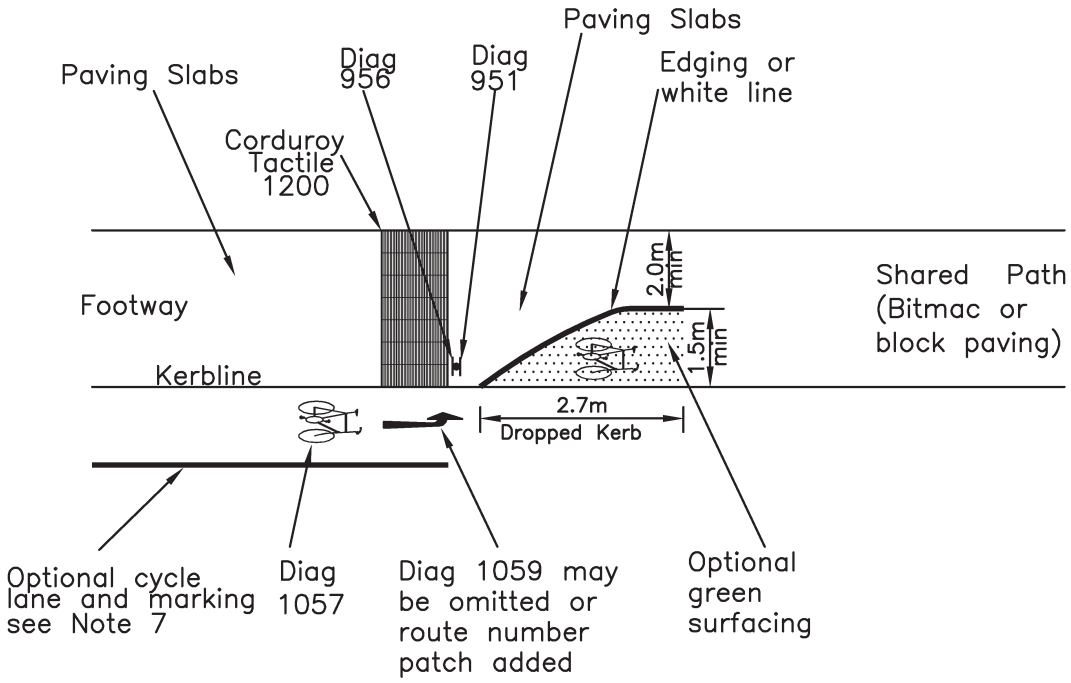

Transport for London

Cycling Centre of Excellence

Windsor House
42-50 Victoria Street
LONDON SW1H 0TL
Telephone 020 7343 5000

Date	Drawn	Checked	Approved	Title	Scale	Drawing no.	Rev.
JAN 2005	DSB	AGB	JL	ACCESS TO SHARED PATH	NTS	CCE/C4.1	

Notes

1. All dimensions in mm unless otherwise stated
2. See also Drawing CCE/C4
3. Hatching or Kerb buildouts should be considerded to protect cyclist exit onto carriageway lane
4. Kerb buildouts or hatched markings should be provided where necessary
5. This layout is suitable for use by Toucan crossings. See CCE/C4 for main entry/exits
6. A Diag 1023 Give-way marking should be added if there is no cycle lane
7. Cycle lanes (on carriageway) may be omitted
8. For further guidance refer to "Guidance on the use of Tactile Paving Surfaces."

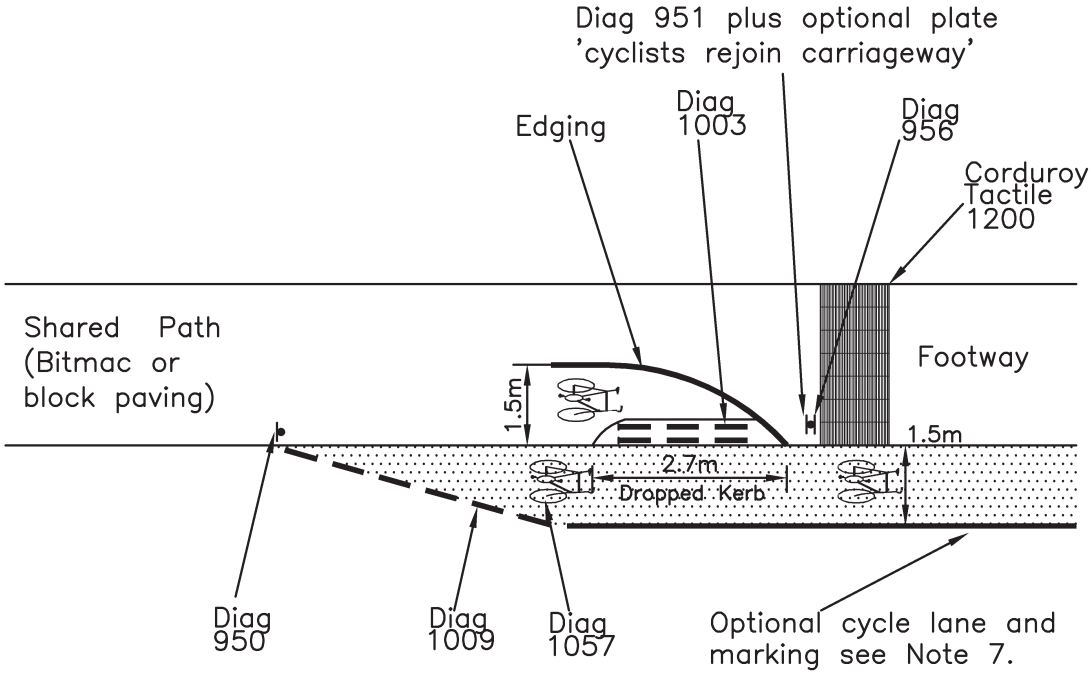

Transport for London

Cycling Centre of Excellence

Windsor House
42-50 Victoria Street
LONDON SW1H 0TL
Telephone 020 7343 5000

Date	Drawn	Checked	Approved	Title	Scale	Drawing no.	Rev.
JAN 2005	DSB	AGB	JL	EXIT FROM SHARED PATH TO CARRIAGEWAY	NTS	CCE/C4.2	

Notes

1. All dimensions in mm unless otherwise stated
2. Radius of cycle track should be increased where space permits.
3. Consider raised table at crossing.
4. For further guidance refer to "Guidance on the use of Tactile Paving Surfaces."
5. Buff blister tactile may be replaced with contrasting grey blister tactile

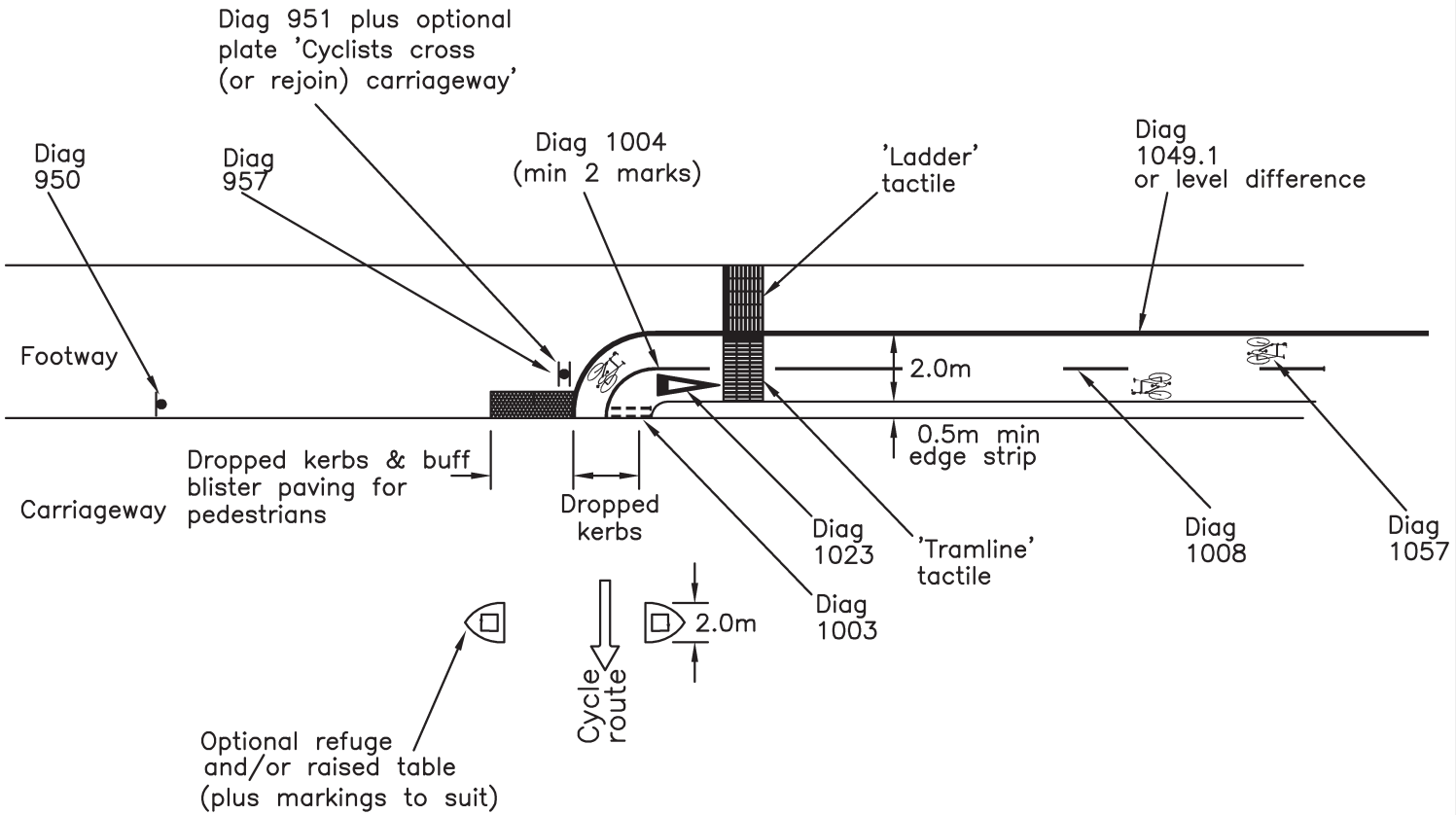

Transport for London

Cycling Centre of Excellence

Windsor House
42-50 Victoria Street
LONDON SW1H 0TL
Telephone 020 7343 5000

Date	Drawn	Checked	Approved	Title	Scale	Drawing no.	Rev.
JAN 2005	DSB	AGB	JL	SEGREGATED SHARED ROUTE JOINING/LEAVING CROSSING POINT	NTS	CCE/C5	

Notes

1. All dimensions in mm unless otherwise stated
2. Revise Diag 1003 markings to a two-way layout if entrance width more than 4m
3. Cycle track should remain level across cross-over

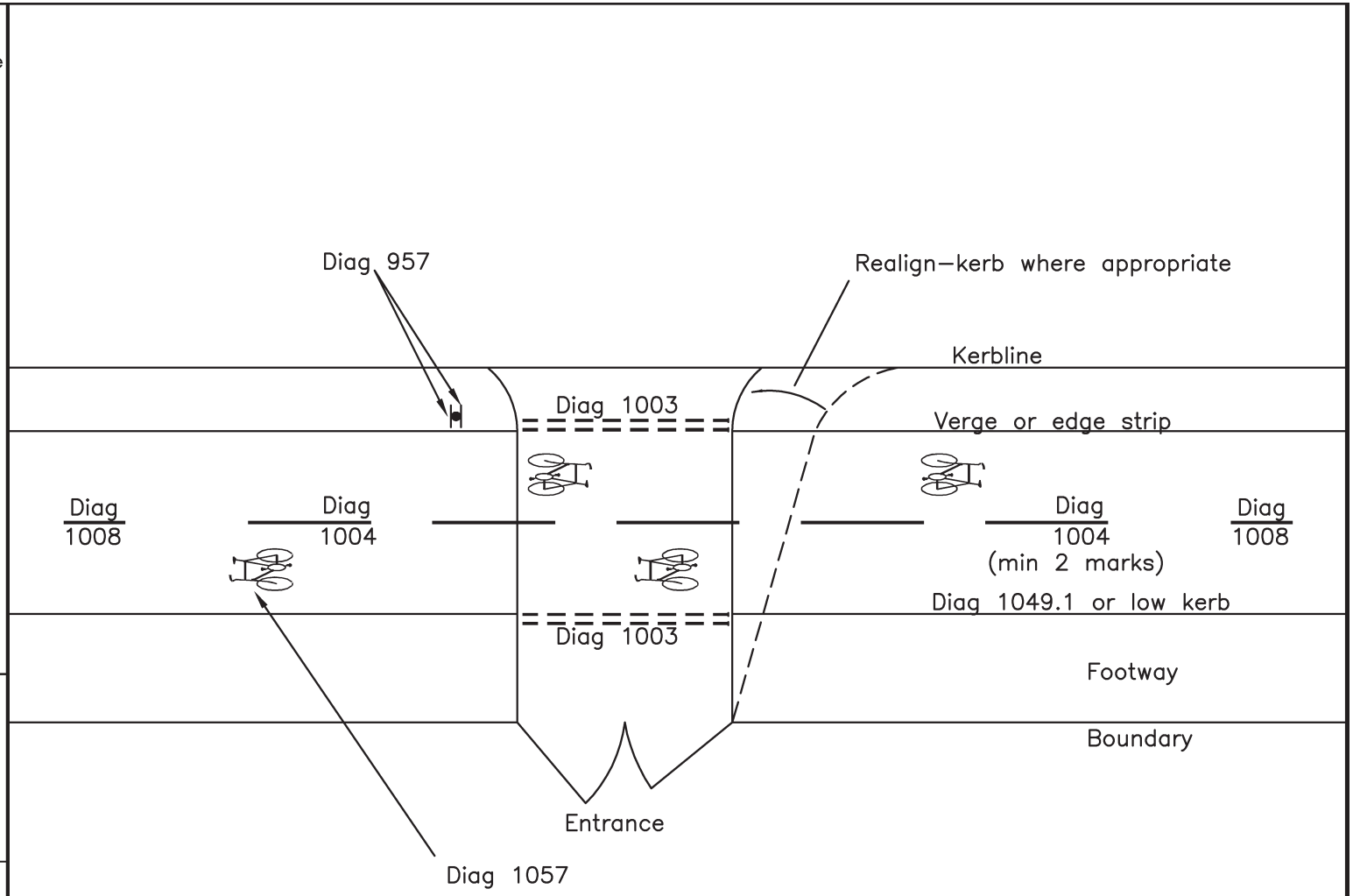

Transport for London

Cycling Centre of Excellence

Windsor House
42-50 Victoria Street
LONDON SW1H 0TL
Telephone 020 7343 5000

Date	Drawn	Checked	Approved	Title	Scale	Drawing no.	Rev.
JAN 2005	DSB	AGB	JL	CYCLE TRACK AT CROSSOVER (CYCLE PRIORITY)	NTS	CCE/C6	

Notes

1. All dimensions in mm unless otherwise stated
2. See drawing CCE/C2 for marking details
3. Incorporate cycle parking where space allows
4. Bollards may be added to protect corners from over running
5. Diag 1062 markings may be omitted
6. For further guidance refer to "Guidance on the use of Tactile Paving Surfaces."
7. Buff blister tactile may be replaced with contrasting grey blister tactile

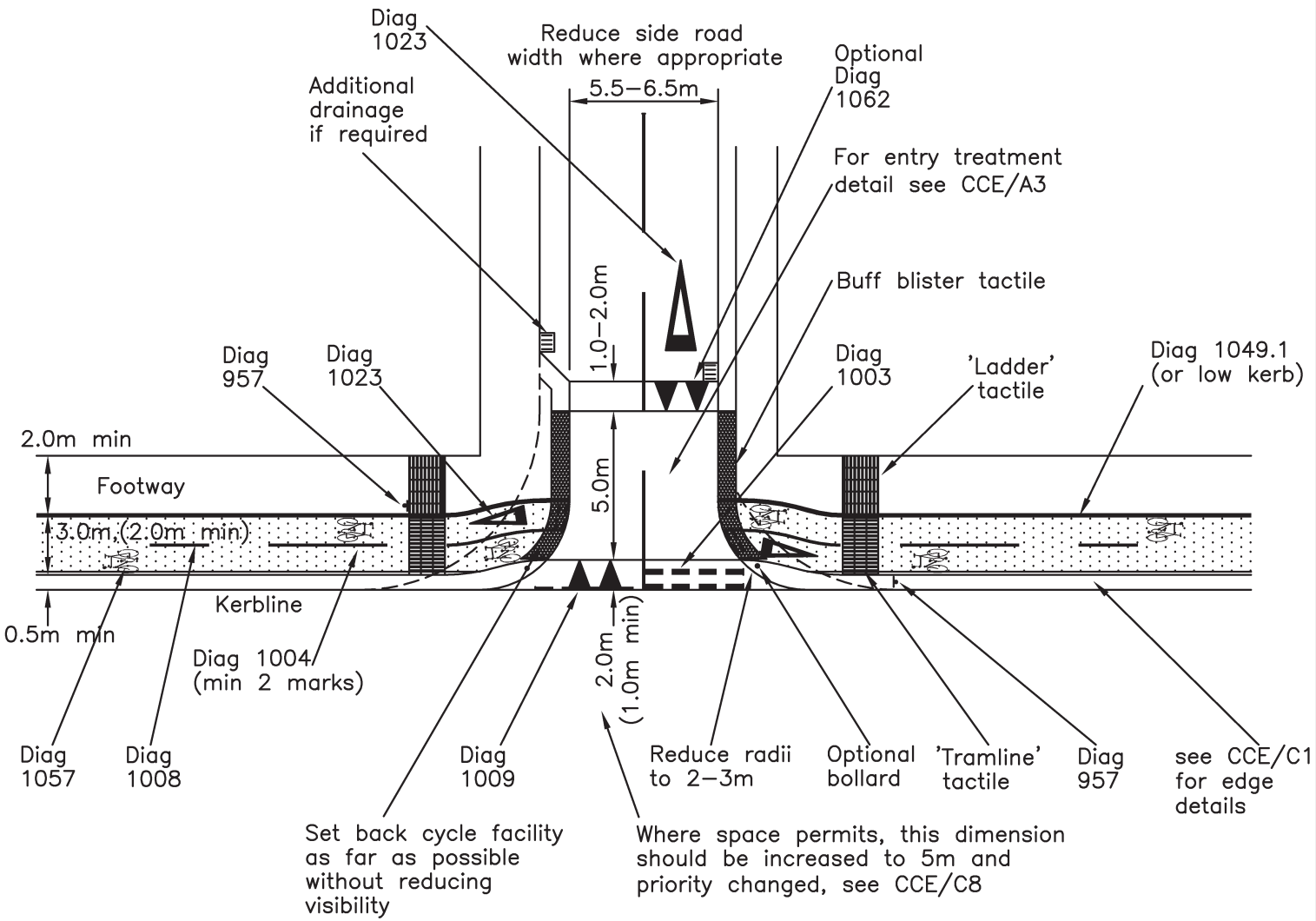

Transport for London

Cycling Centre of Excellence

Windsor House
42-50 Victoria Street
LONDON SW1H 0TL
Telephone 020 7343 5000

Date	Drawn	Checked	Approved	Title	Scale	Drawing no.	Rev.
JAN 2005	DSB	AGB	JL	CYCLE TRACK AT ENTRY TREATMENT SET-BACK LESS THAN 5M	NTS	CCE/C7	

Notes

1. All dimensions in mm unless otherwise stated
2. Cycle parking should not obstruct sight lines.
3. Coloured surfaces may be added to the table.
4. For further guidance refer to "Guidance on the use of Tactile Paving Surfaces."
5. Buff blister tactile may be replaced with contrasting grey blister tactile

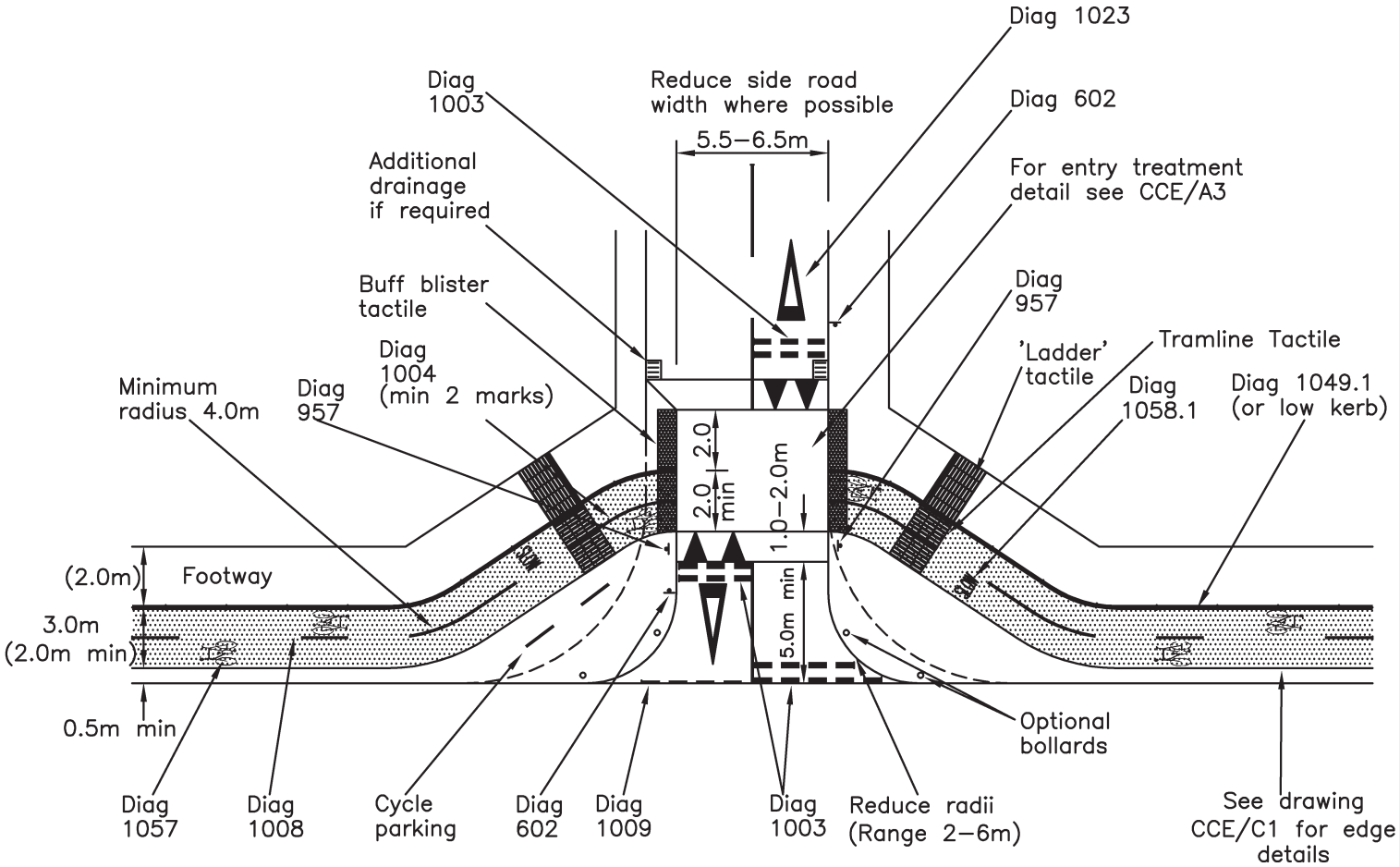

Transport for London

Cycling Centre of Excellence

Windsor House
42-50 Victoria Street
LONDON SW1H 0TL
Telephone 020 7343 5000

Date	Drawn	Checked	Approved	Title	Scale	Drawing no.	Rev.
JAN 2005	DSB	AGB	JL	CYCLE TRACK AT ENTRY TREATMENT SET BACK 5M OR MORE	NTS	CCE/C8	

Notes

1. All dimensions in mm unless otherwise stated
2. For further guidance refer to "Guidance on the use of Tactile Paving Surfaces."
3. Alternative layout required where pedestrians cross carriageway
4. Buff blister tactile may be replaced with contrasting grey blister tactile

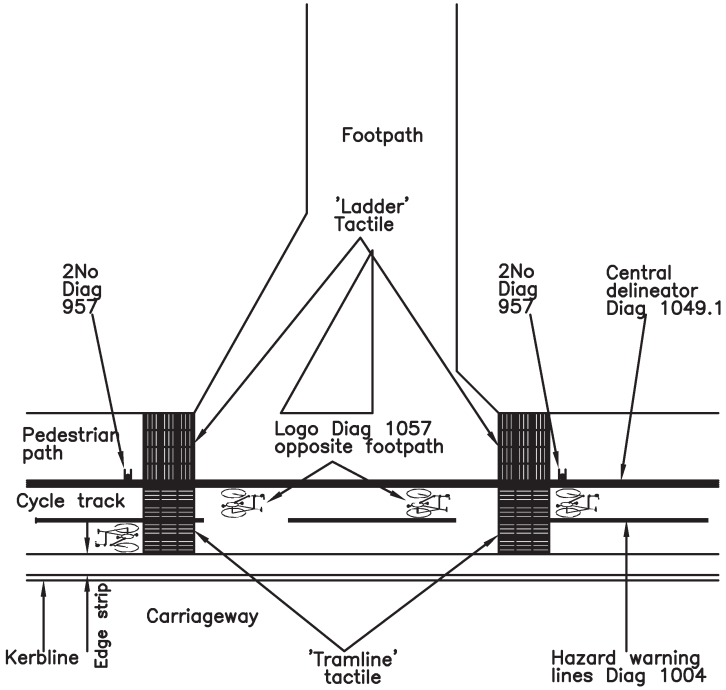

A) WHERE THE FOOTPATH JOINS ON THE PEDESTRIAN SIDE

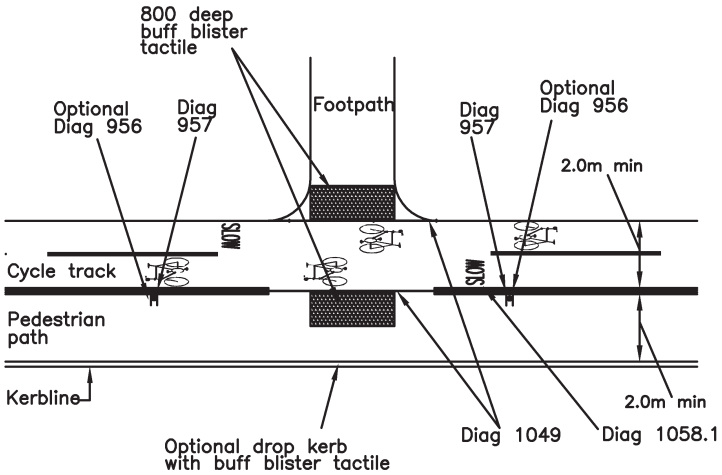

B) WHERE THE FOOTPATH JOINS ON THE CYCLIST SIDE

Transport for London

Cycling Centre of Excellence

Windsor House
42-50 Victoria Street
LONDON SW1H 0TL
Telephone 020 7343 5000

Date	Drawn	Checked	Approved	Title	Scale	Drawing no.	Rev.
JAN 2005	DSB	AGB	JL	FOOTPATH JOINING A SEGREGATED ROUTE	NTS	CCE/C9	

Notes

1. All dimensions in mm unless otherwise stated
2. For further guidance refer to "Guidance on the use of Tactile Paving Surfaces."
3. Alternative layout required where pedestrians cross carriageway
4. Buff blister tactile may be replaced with contrasting grey blister tactile

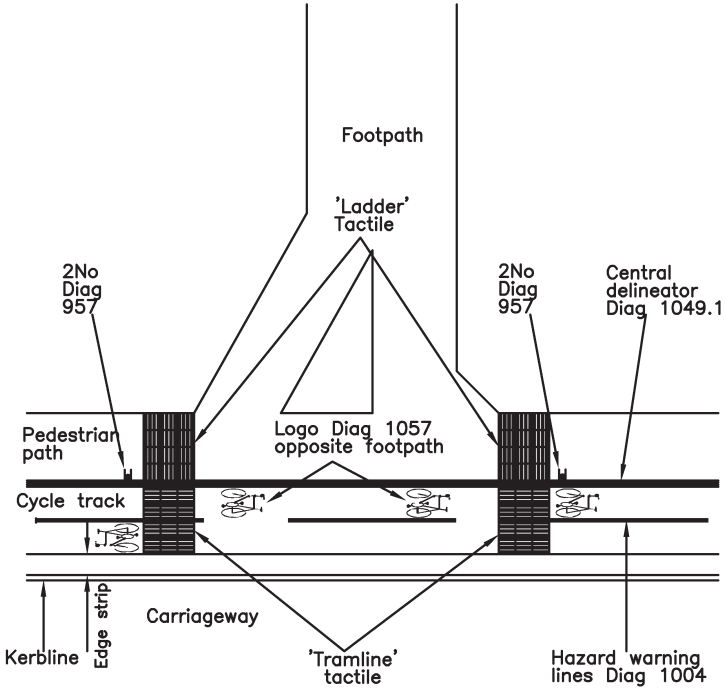

A) WHERE THE FOOTPATH JOINS ON THE PEDESTRIAN SIDE

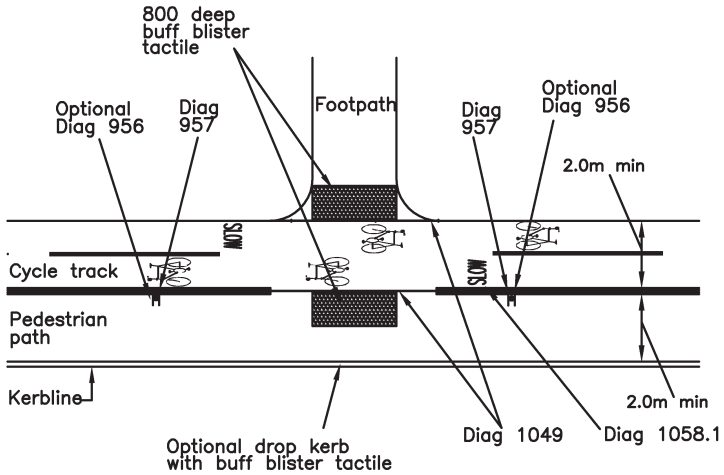

B) WHERE THE FOOTPATH JOINS ON THE CYCLIST SIDE

Transport for London

Cycling Centre of Excellence

Windsor House
42-50 Victoria Street
LONDON SW1H 0TL
Telephone 020 7343 5000

Date	Drawn	Checked	Approved	Title	Scale	Drawing no.	Rev.
JAN 2005	DSB	AGB	JL	FOOTPATH JOINING A SEGREGATED ROUTE	NTS	CCE/C9	

Notes

1. All dimensions in mm unless otherwise stated
2. See CCE/C11.1 where the carriageway is adjacent.
3. The CCE/C11.1 layout can be used as an alternative where greater cycle priority is desired.
4. For further guidance refer to "Guidance on the use of Tactile Paving Surfaces."

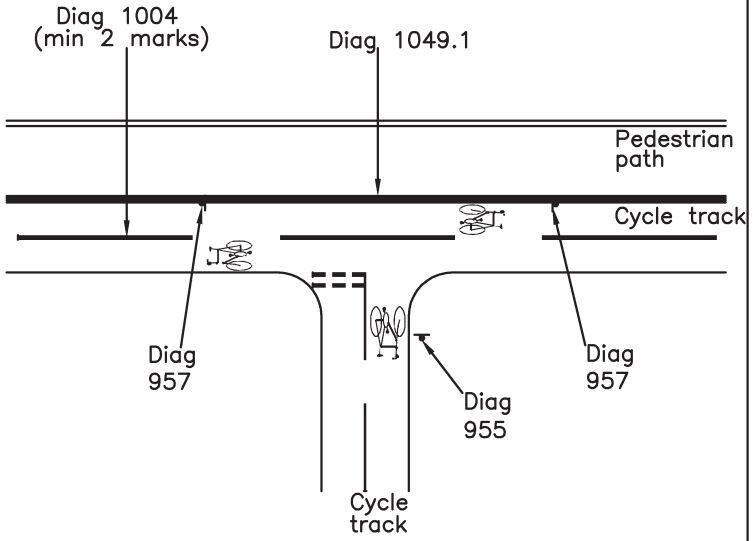

A) WHERE THE CYCLE TRACK JOINS ON THE CYCLIST SIDE

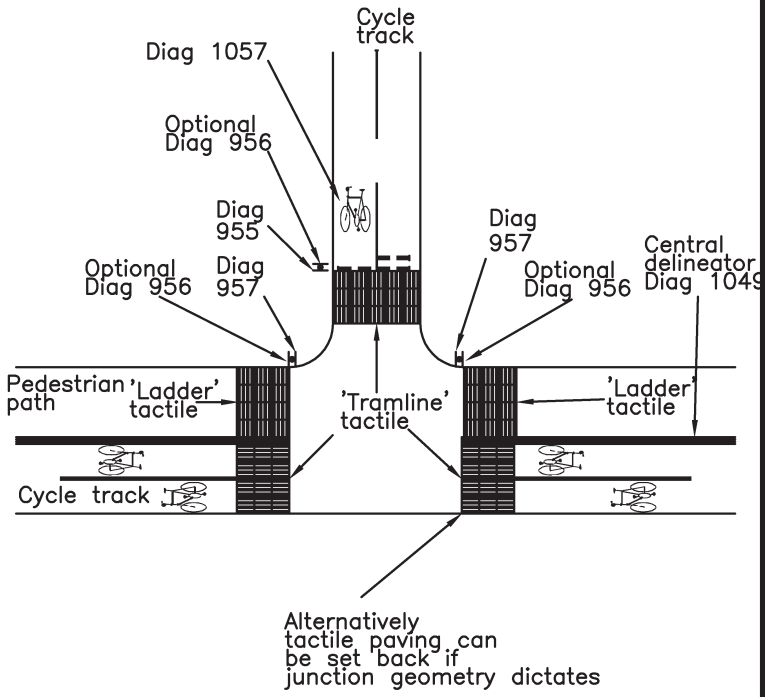

B) WHERE THE CYCLE TRACK JOINS ON THE PEDESTRIAN SIDE

Transport for London

Cycling Centre of Excellence

Windsor House
42-50 Victoria Street
LONDON SW1H 0TL
Telephone 020 7343 5000

Date	Drawn	Checked	Approved	Title	Scale	Drawing no.	Rev.
JAN 2005	DSB	AGB	JL	CYCLE TRACK JOINING A SEGREGATED ROUTE	NTS	CCE/C10	

Notes

1. All dimensions in mm unless otherwise stated
2. Tactile paving is available in different colours, so specify.
3. For further guidance refer to "Guidance on the use of Tactile Paving Surfaces."

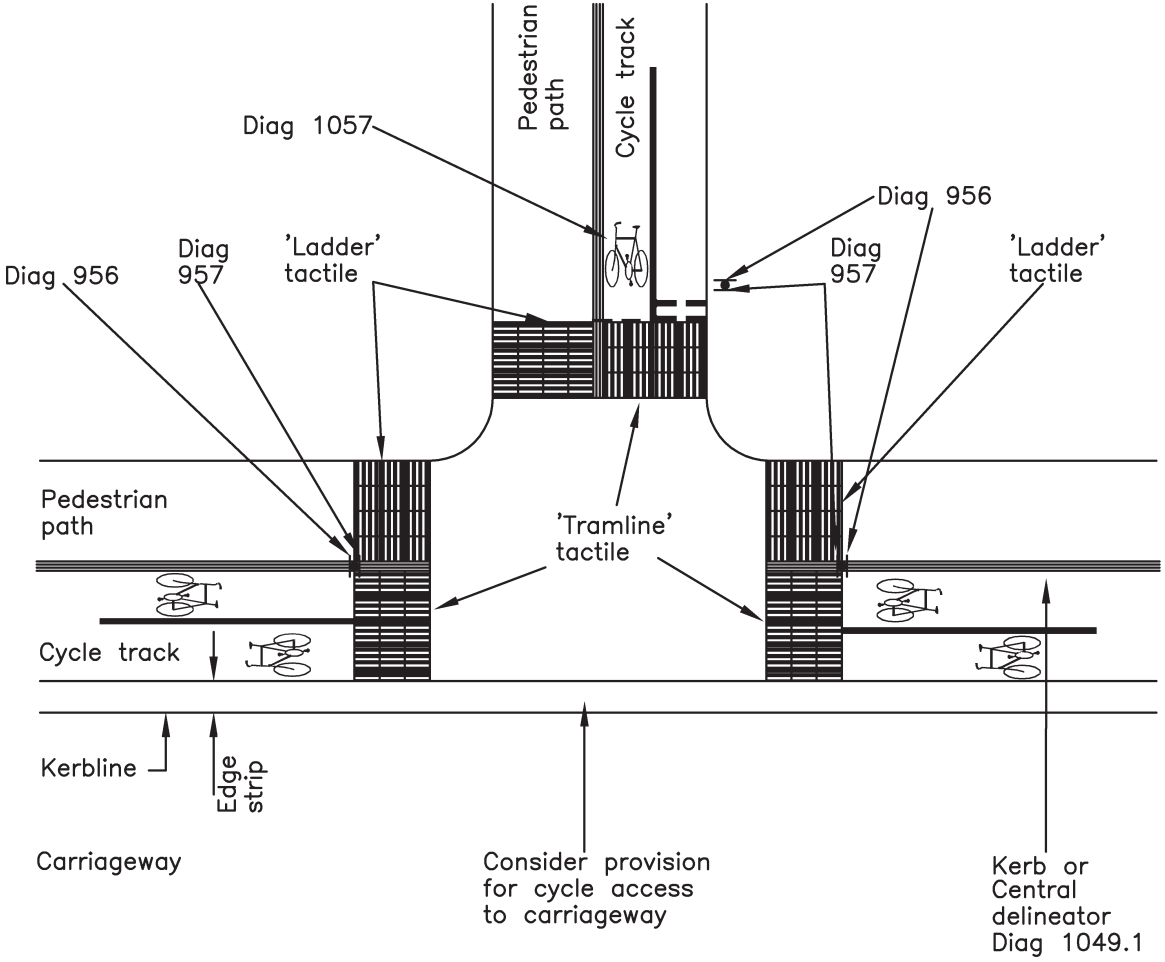

Transport for London

Cycling Centre of Excellence

Windsor House
42-50 Victoria Street
LONDON SW1H 0TL
Telephone 020 7343 5000

Date	Drawn	Checked	Approved	Title	Scale	Drawing no.	Rev.
JAN 2005	DSB	AGB	JL	SEGREGATED ROUTE WITH SHARED AREA AT T JUNCTION	NTS	CCE/C11	

Notes

1. All dimensions in mm unless otherwise stated
2. Tramline and ladder tactile is best set back 2-3m from junction.
3. For further guidance refer to "Guidance on the use of Tactile Paving Surfaces."
4. Buff blister tactile may be replaced with contrasting grey blister tactile

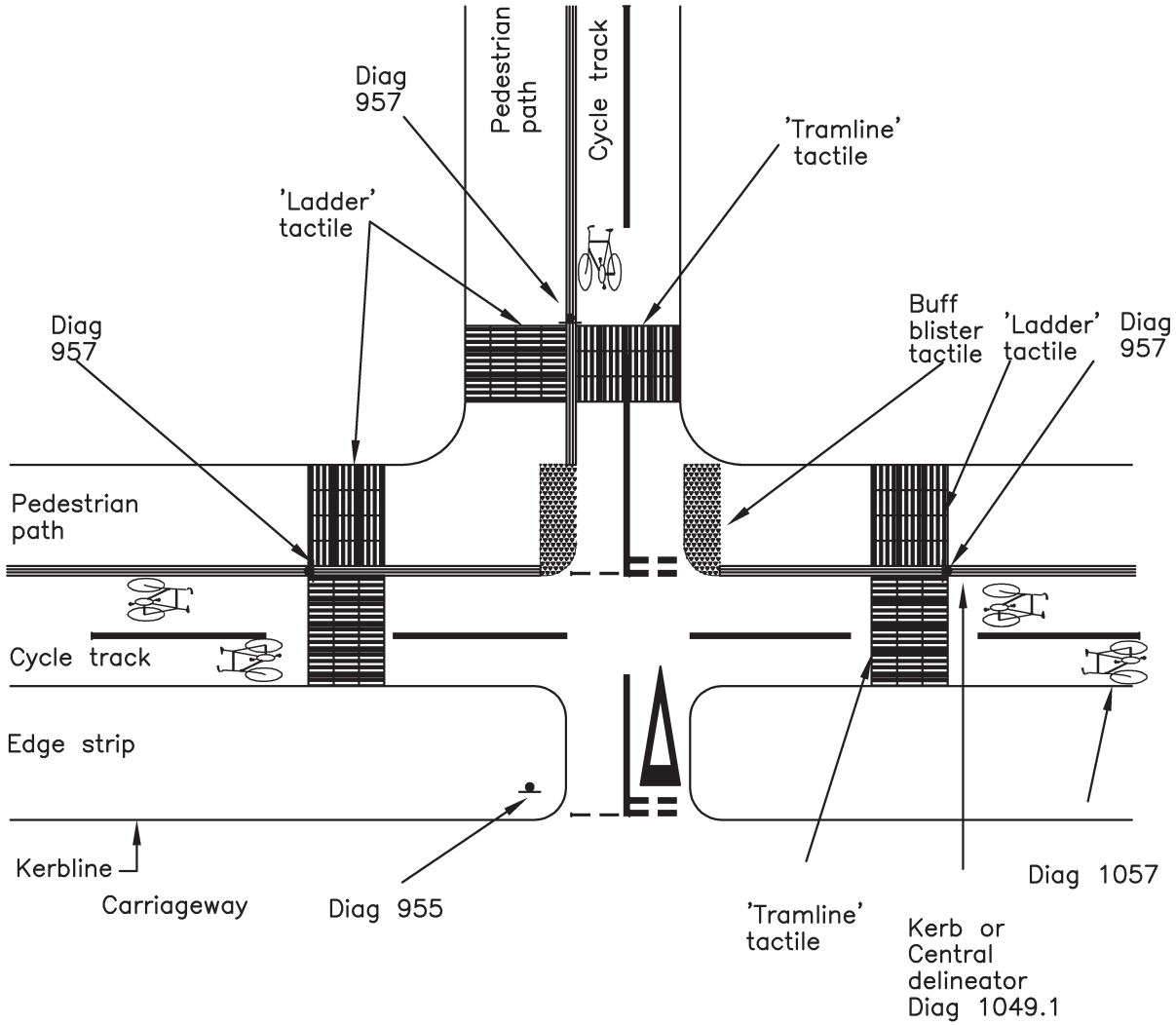

Transport for London

Cycling Centre of Excellence

Windsor House
42-50 Victoria Street
LONDON SW1H 0TL
Telephone 020 7343 5000

Date	Drawn	Checked	Approved	Title	Scale	Drawing no.	Rev.
JAN 2005	DSB	AGB	JL	SEGREGATED ROUTE T JUNCTION LINKING TO CARRIAGEWAY	NTS	CCE/C11.1	

Notes

1. All dimensions in mm unless otherwise stated
2. See CCE/C4.1 and C4.2 for access and exit details to allow turning movements.
3. Consider raised tables at crossings.
4. There is always a shared surface to the side of Toucan crossings
5. Use contrasting surface (i.e. block paving) at unsegregated shared surface.
6. For further guidance refer to "Guidance on the use of Tactile Paving Surfaces."

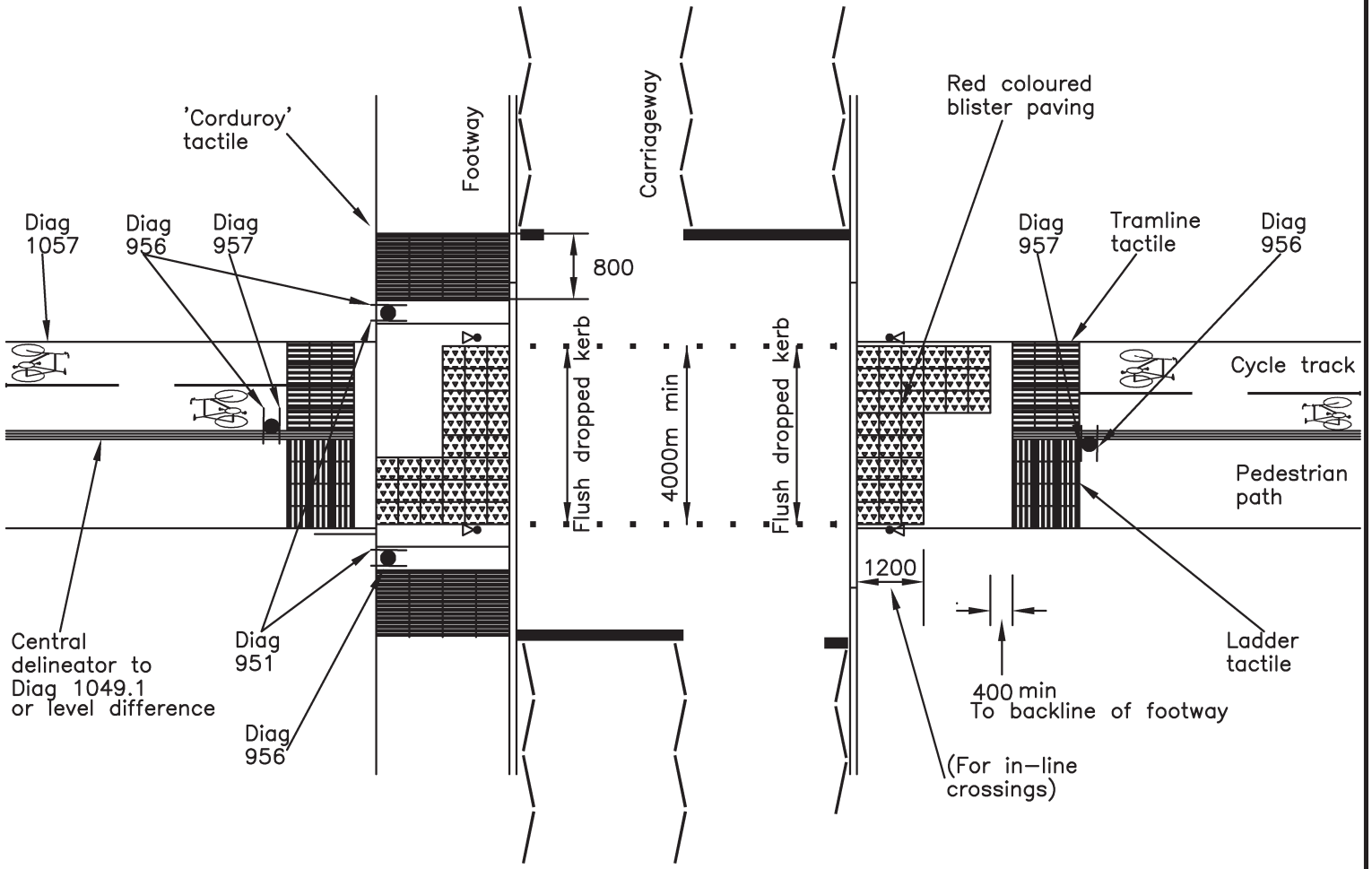

Transport for London

Cycling Centre of Excellence

Windsor House
42-50 Victoria Street
LONDON SW1H 0TL
Telephone 020 7343 5000

Date	Drawn	Checked	Approved	Title	Scale	Drawing no.	Rev.
JAN 2005	DSB	AGB	JL	SEGREGATED ROUTE AT A TOUCAN CROSSING	NTS	CCE/C12	

Notes

1. All dimensions in mm unless otherwise stated
2. See CCE/C4.1 and C4.2 for access and exit details to allow turning movements.
3. Option B may be preferable where low frontage activity but high level of pedestrians crossing.
4. For further guidance refer to "Guidance on the use of Tactile Paving Surfaces."

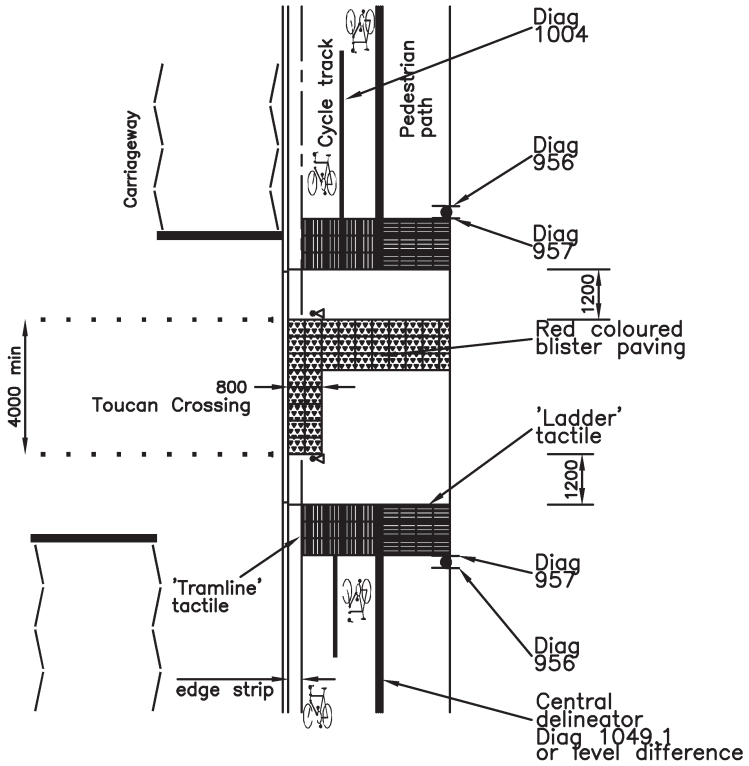

A) WHERE THE CYCLE TRACK IS ON THE CARRIAGEWAY SIDE (normal layout)

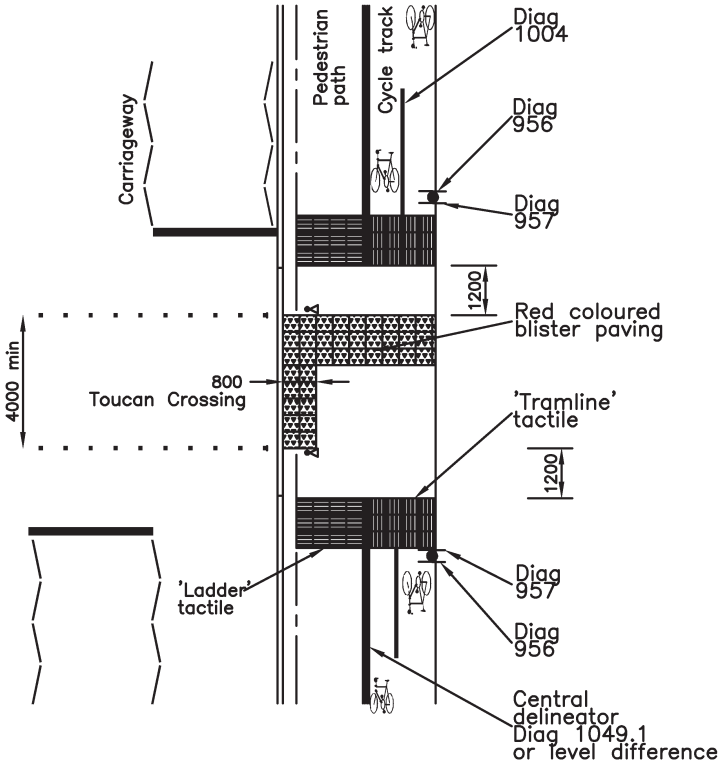

B) WHERE THE PEDESTRIAN PATH IS ON THE CARRIAGEWAY SIDE

Transport for London

Cycling Centre of Excellence

Windsor House
42-50 Victoria Street
LONDON SW1H 0TL
Telephone 020 7343 5000

Date	Drawn	Checked	Approved	Title	Scale	Drawing no.	Rev.
JAN 2005	DSB	AGB	JL	SEGREGATED ROUTE ALONGSIDE A TOUCAN CROSSING	NTS	CCE/C13	

Notes

1. All dimensions in mm unless otherwise stated
2. A raised table crossing may be used.
3. Flush dropped kerbs at cycle track crossings.
4. Consider use of coloured surfacing in restricted areas.
5. Coloured surfacing is unlikely to be necessary for cycle tracks

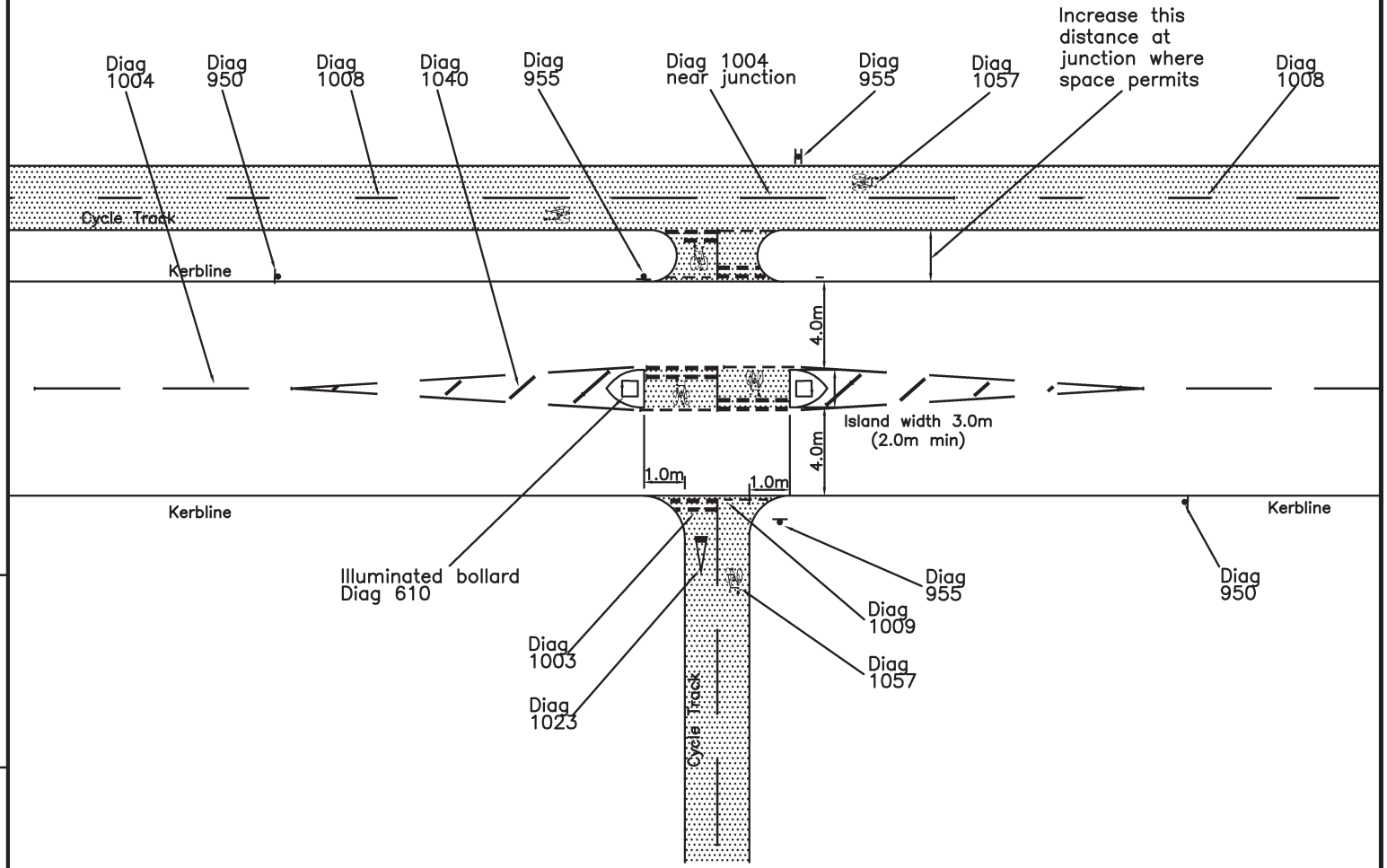

Transport for London

Cycling Centre of Excellence

Windsor House
42-50 Victoria Street
LONDON SW1H 0TL
Telephone 020 7343 5000

Date	Drawn	Checked	Approved	Title	Scale	Drawing no.	Rev.
JAN 2005	DSB	AGB	JL	CYCLE TRACK GIVE-WAY CROSSING OF ROAD	NTS	CCE/C14	

Notes

1. All dimensions in mm unless otherwise stated
2. Refuge not necessary where vehicle flows are less than 3000vpd.
3. Consider use of coloured surfacing for restricted areas.
4. Consider a raised table crossing.
5. Coloured surfacing is unlikely to be necessary for cycle track.

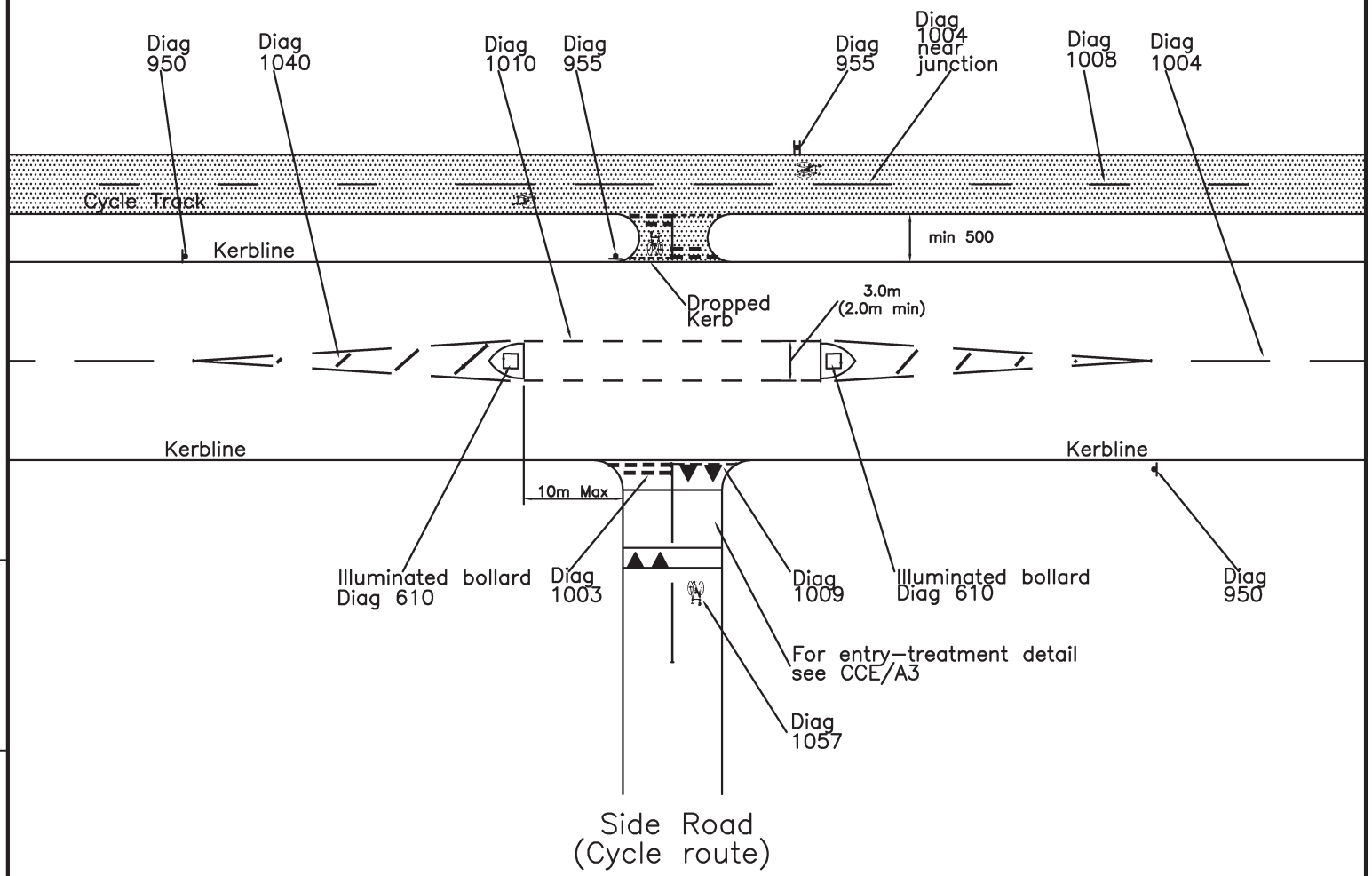

Transport for London

Cycling Centre of Excellence

Windsor House
42-50 Victoria Street
LONDON SW1H 0TL
Telephone 020 7343 5000

Date	Drawn	Checked	Approved	Title	Scale	Drawing no.	Rev.
JAN 2005	DSB	AGB	JL	CYCLE TRACK JUNCTION WITH OPPOSITE SIDE-ROAD	NTS	CCE/C15	

Notes

1. All dimensions in mm unless otherwise stated
2. Side road can be two-way; one-way or closed.
3. Toucan can be on either side.
4. Reduce permissible turning movements.
5. Put Toucan as close to junction as possible.
6. Optional junction table.
7. Provide markings and restrictions to prevent blocking of access to shared surfaces.
8. For further guidance refer to "Guidance on the use of Tactile Paving Surfaces."
9. There is always a shared surface to the side of Toucan Crossings

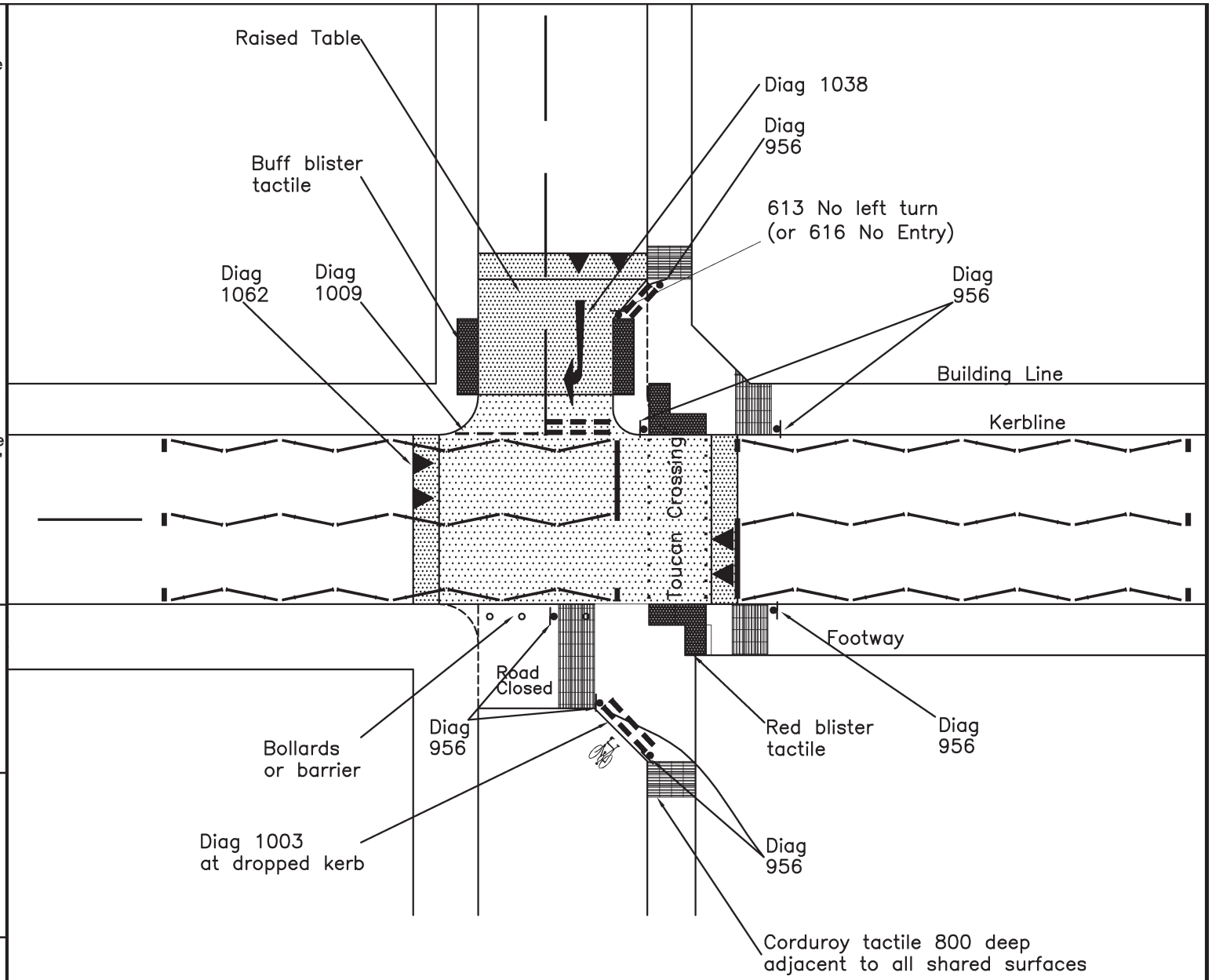

Transport for London

Cycling Centre of Excellence

Windsor House
42-50 Victoria Street
LONDON SW1H 0TL
Telephone 020 7343 5000

Date	Drawn	Checked	Approved	Title	Scale	Drawing no.	Rev.
JAN 2005	DSB	AGB	JL	TOUCAN AT ROAD JUNCTION	NTS	CCE/C16	

Notes

1. All dimensions in mm unless otherwise stated
2. 'Look Both Ways' marking may be added to all crossing points.
3. 'Zebra' may not be necessary on cycle track if the dividing island is wider than 2m. Buff tactile should then be used either side of the cycle track.
4. The cycle track and/or road may be one way.
5. For further guidance refer to "Guidance on the use of Tactile Paving Surfaces."

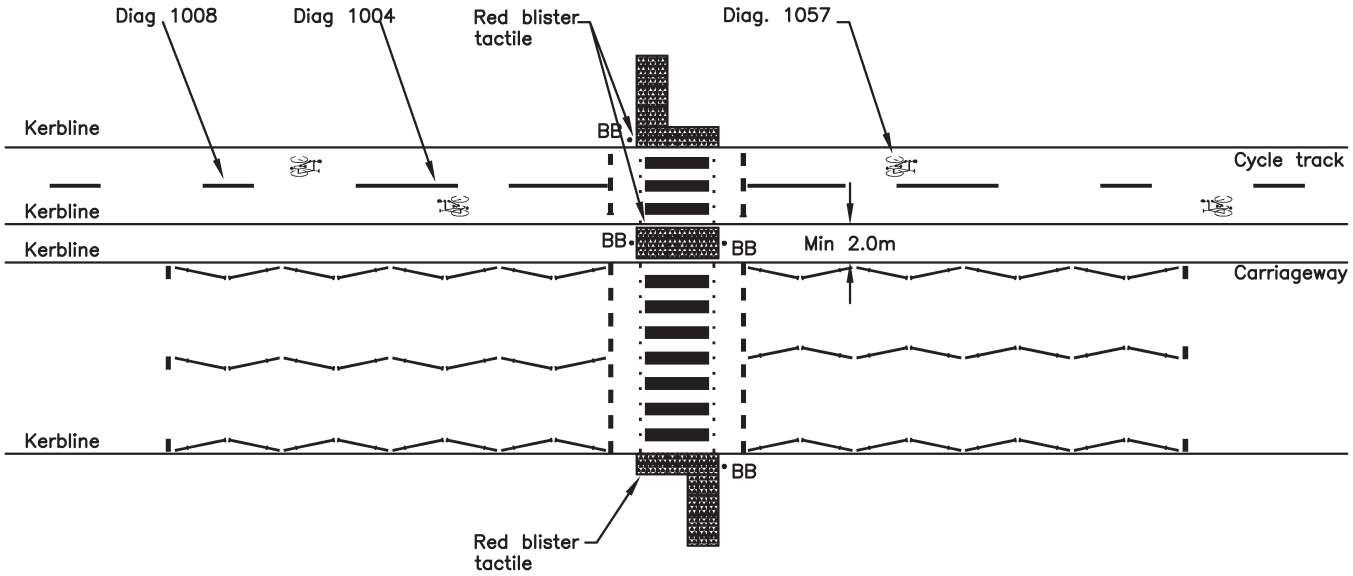

Transport for London

Cycling Centre of Excellence

Windsor House
42-50 Victoria Street
LONDON SW1H 0TL
Telephone 020 7343 5000

Date	Drawn	Checked	Approved	Title	Scale	Drawing no.	Rev.
JAN 2005	DSB	AGB	JL	CYCLE TRACK AT ZEBRA	NTS	CCE/C17	

Notes

1. All dimensions in mm unless otherwise stated
2. Coloured surfacing may be added to cycle surface.
3. For further guidance refer to "Guidance on the use of Tactile Paving Surfaces."
4. Diag 1001.3 must conform to TSRGD or have DfT site approval.

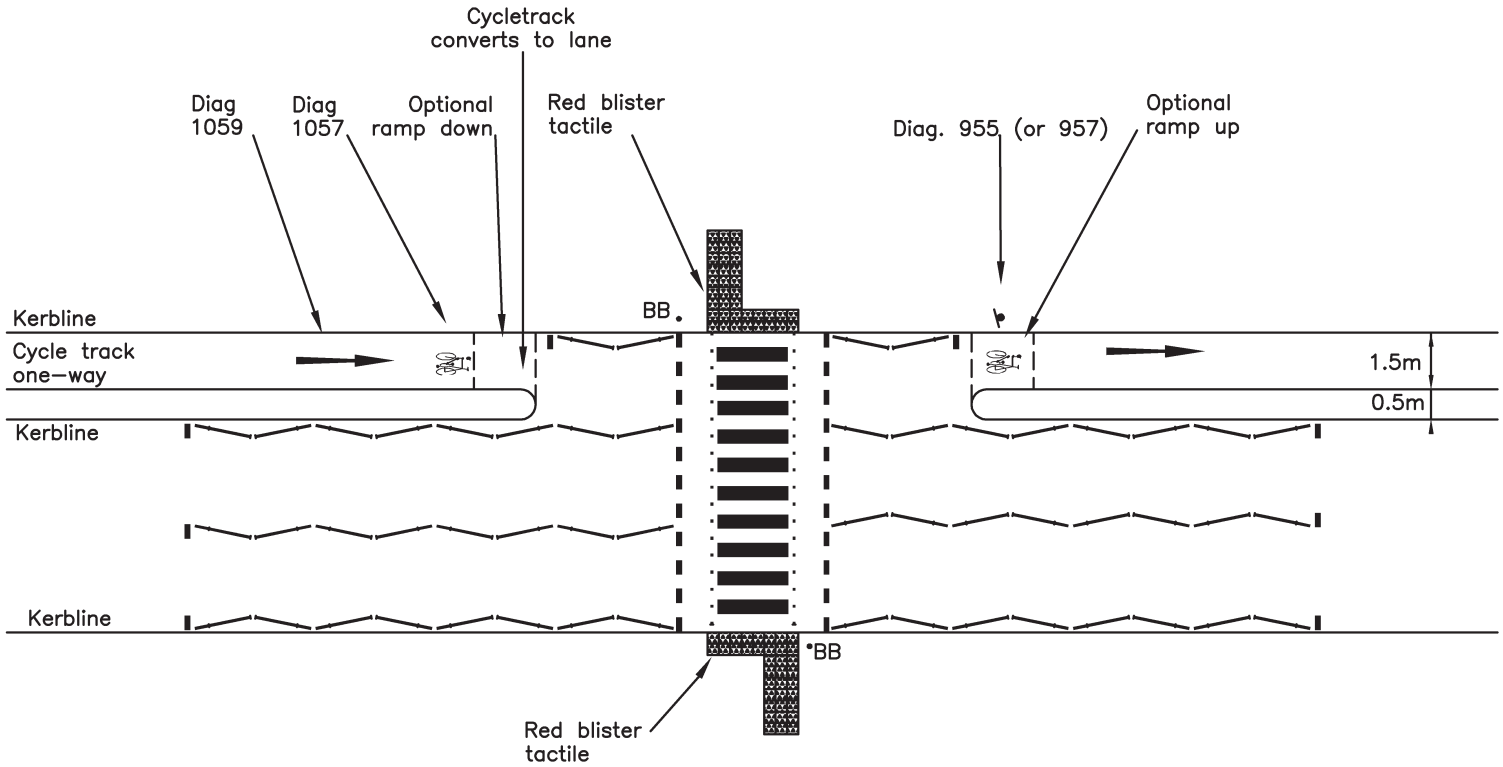

Transport for London

Cycling Centre of Excellence

Windsor House
42-50 Victoria Street
LONDON SW1H 0TL
Telephone 020 7343 5000

Date	Drawn	Checked	Approved	Title	Scale	Drawing no.	Rev.
JAN 2005	DSB	AGB	JL	CYCLE TRACK AT ZEBRA - CHANGES TO LANE	NTS	CCE/C18	

Notes

1. All dimensions in mm unless otherwise stated
2. For further guidance refer to "Guidance on the use of Tactile Paving Surfaces"
3. Buff blister tactile may be replaced with contrasting grey blister tactile

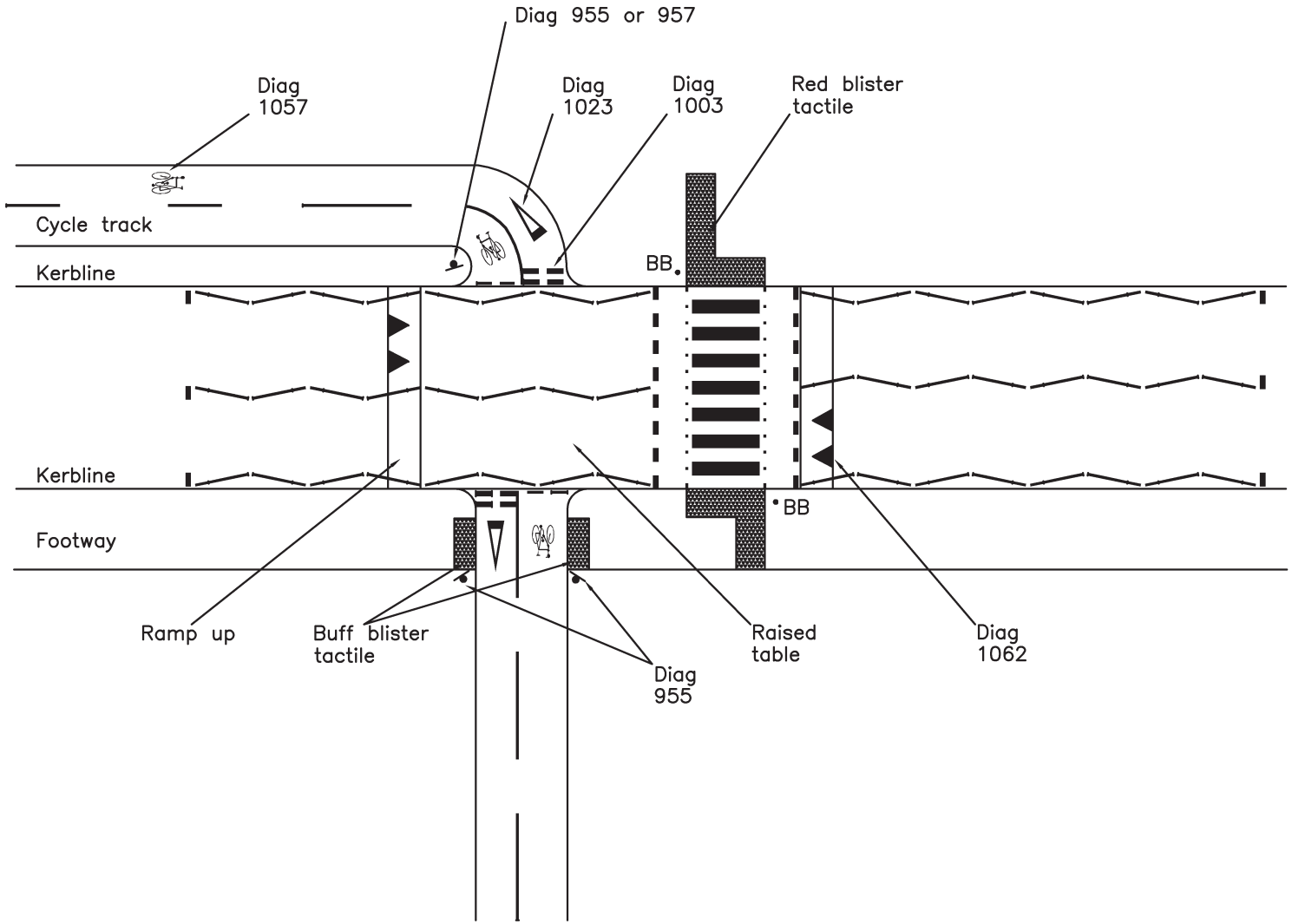

Transport for London

Cycling Centre of Excellence

Windsor House
42-50 Victoria Street
LONDON SW1H 0TL
Telephone 020 7343 5000

Date	Drawn	Checked	Approved	Title	Scale	Drawing no.	Rev.
JAN 2005	DSB	AGB	JL	CYCLE TRACK CROSSING ADJACENT TO A ZEBRA	NTS	CCE/C19	

Notes

1. All dimensions in mm unless otherwise stated
2. See CCE/C4A for access and exit details to allow turning movements.
3. Consider raised tables at crossings.
4. For further guidance refer to "Guidance on the use of Tactile Paving Surfaces."
5. WBM 294 'Elephant Footprints' must conform to TSRGD or have DfT approval.

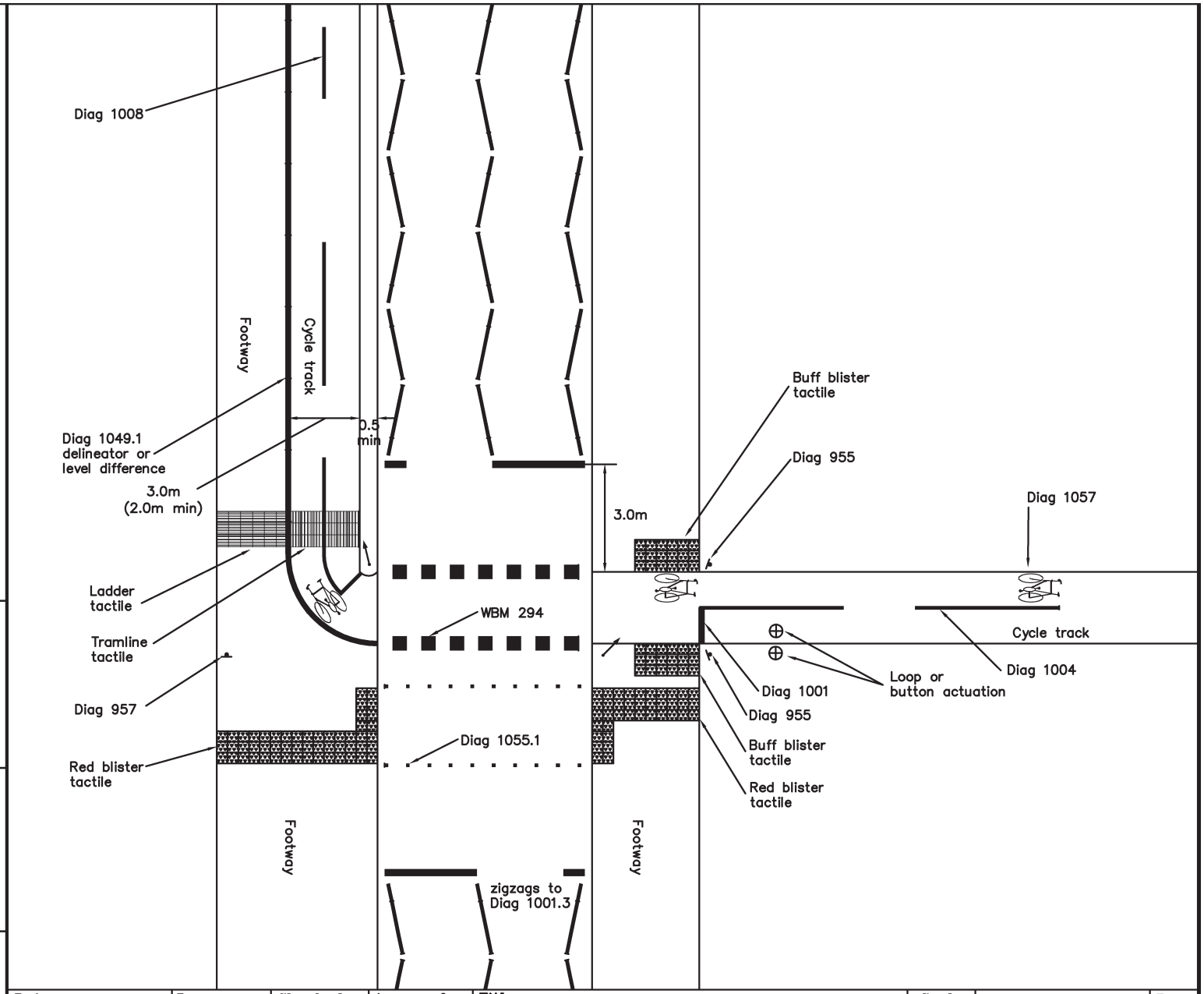

Transport for London

Cycling Centre of Excellence

Windsor House
42-50 Victoria Street
LONDON SW1H 0TL
Telephone 020 7343 5000

Date	Drawn	Checked	Approved	Title	Scale	Drawing no.	Rev.
JAN 2005	DSB	AGB	JL	SEGREGATED ROUTE AT PARALLEL SIGNAL CONTROLLED CROSSING	NTS	CCE/C21	

Notes

1. All dimensions in mm unless otherwise stated
2. See CCE/A3 for entry treatment details, including markings.
3. For adjacent/segregated cycle track layout see CCE/C7
4. Buff blister tactile may be replaced with contrasting grey blister tactile

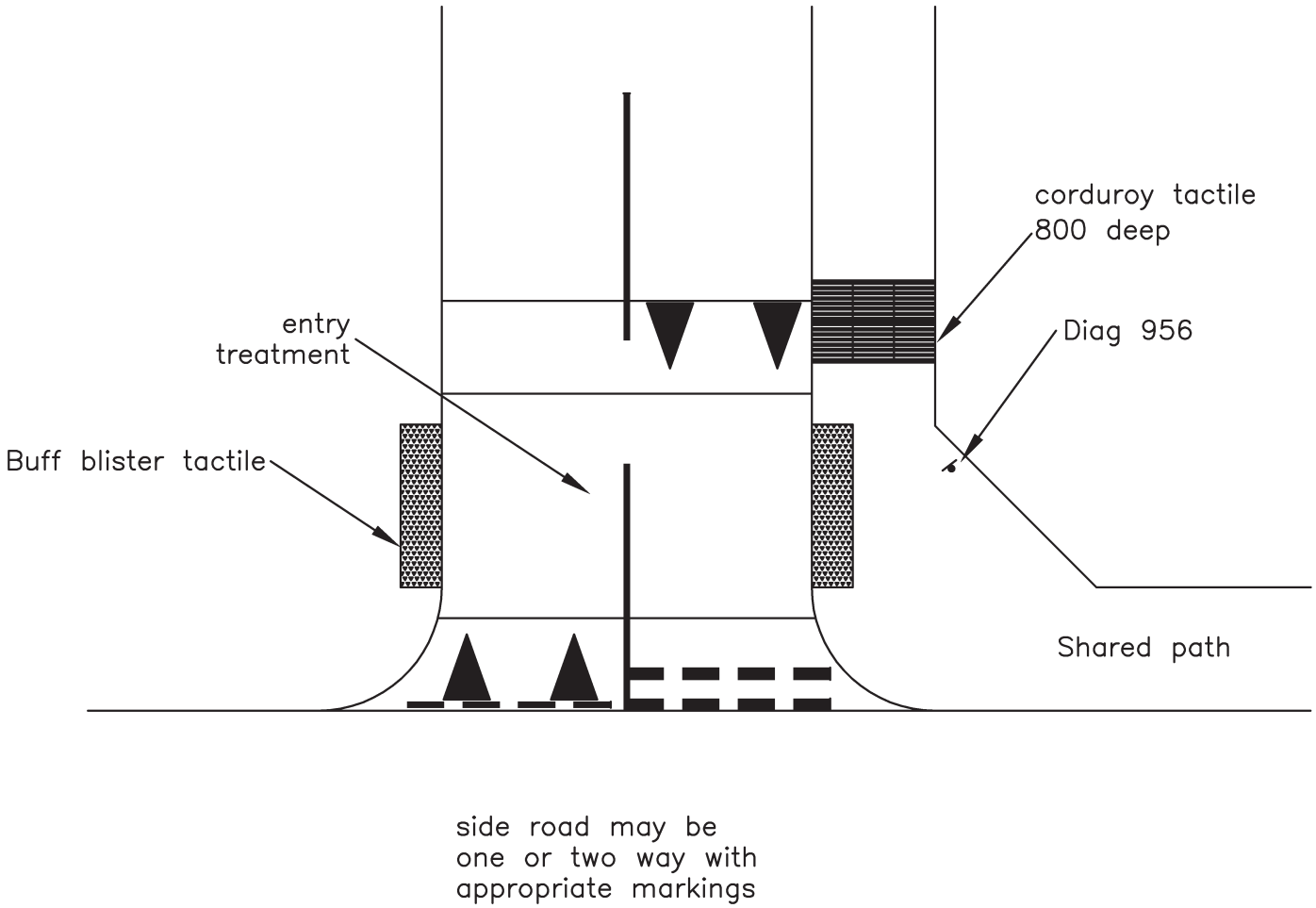

Transport for London

Cycling Centre of Excellence

Windsor House
42-50 Victoria Street
LONDON SW1H 0TL
Telephone 020 7343 5000

Date	Drawn	Checked	Approved	Title	Scale	Drawing no.	Rev.
JAN 2005	DSB	AGB	JL	SHARED PATH TERMINATED AT SIDE ROAD	NTS	CCE/C25	

Notes

1. All dimensions in mm unless otherwise stated
2. Avoid blind points at shelter
3. The shared path to extend 5m beyond bus cage markings

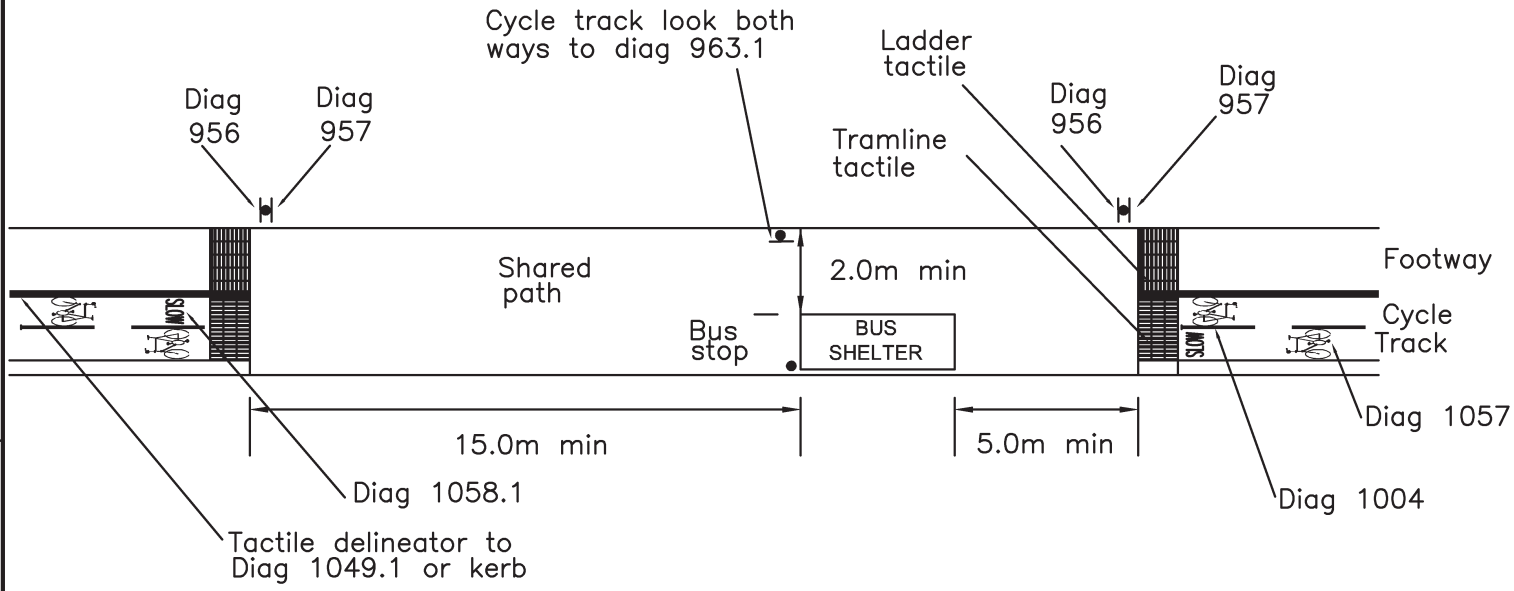

Transport for London

Cycling Centre of Excellence

Windsor House
42-50 Victoria Street
LONDON SW1H 0TL
Telephone 020 7343 5000

Date	Drawn	Checked	Approved	Title	Scale	Drawing no.	Rev.
JAN 2005	DSB	AGB	JL	SEGREGATED BECOMING SHARED PATH AT BUS STOP	NTS	CCE/C26	

Notes

1. All dimensions in mm unless otherwise stated
2. Avoid blind points at shelter
3. The shared path to extend 5m beyond bus cage markings

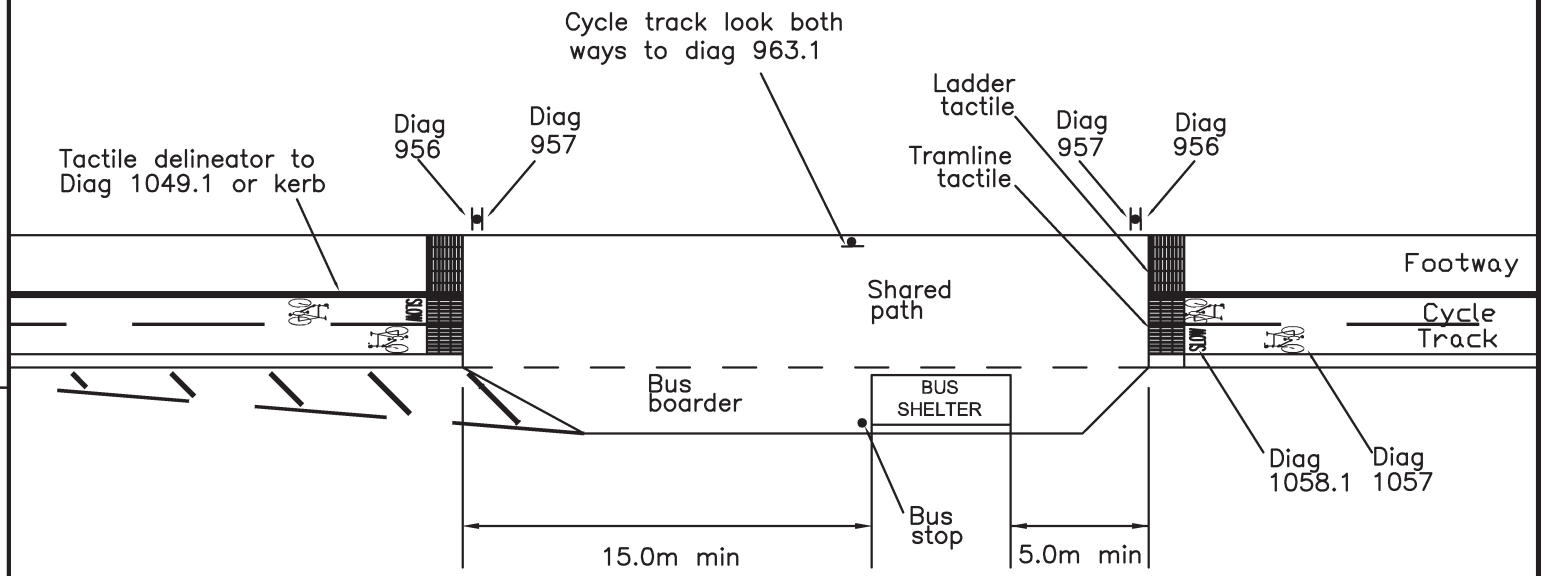

Transport for London

Cycling Centre of Excellence

Windsor House
42-50 Victoria Street
LONDON SW1H 0TL
Telephone 020 7343 5000

Date	Drawn	Checked	Approved	Title	Scale	Drawing no.	Rev.
JAN 2005	DSB	AGB	JL	SEGREGATED BECOMING SHARED PATH AT BUS BOARDER	NTS	CCE/C27	

Notes

1. All dimensions in mm unless otherwise stated
2. Avoid blind points at shelter
3. The shared path to extend 5m beyond bus cage markings
4. Buff blister tactile may be replaced with contrasting grey blister tactile

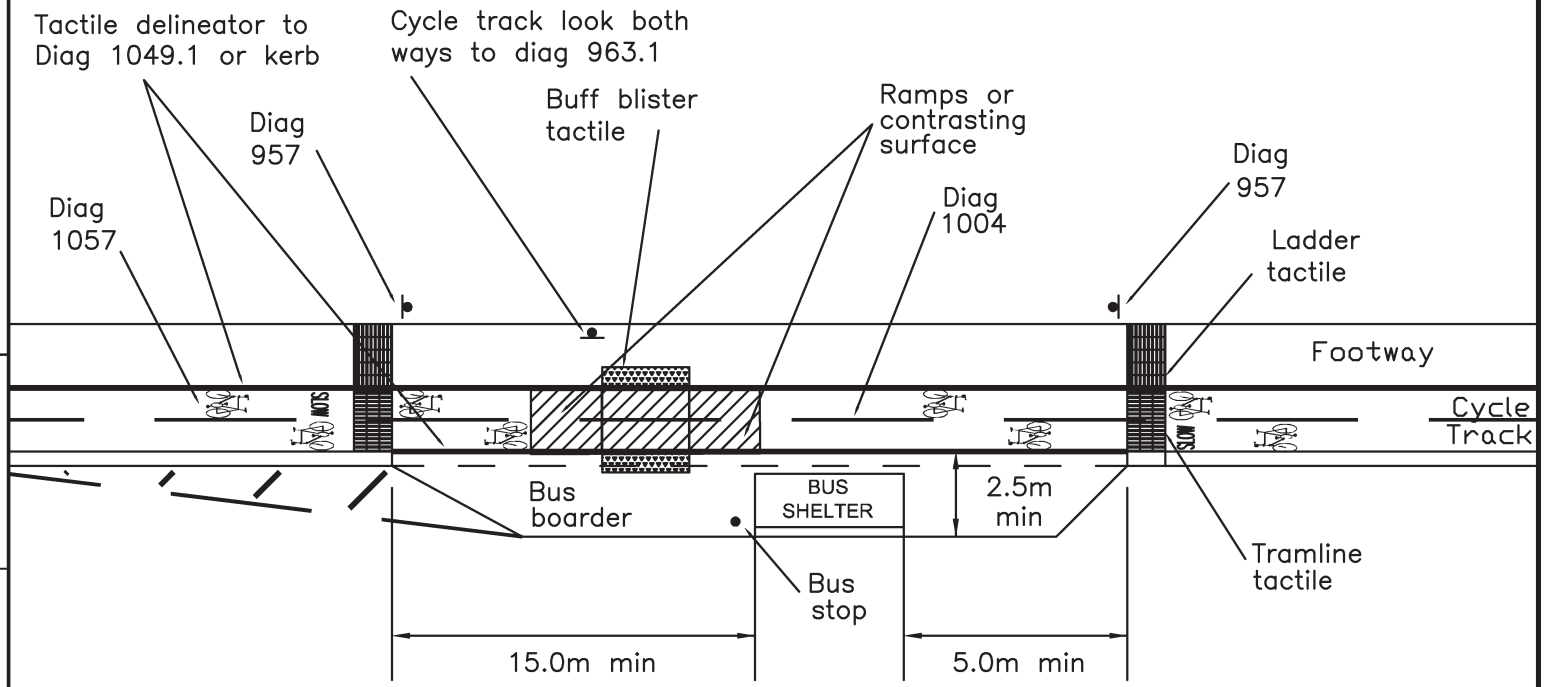

Transport for London

Cycling Centre of Excellence

Windsor House
42-50 Victoria Street
LONDON SW1H 0TL
Telephone 020 7343 5000

Date	Drawn	Checked	Approved	Title	Scale	Drawing no.	Rev.
JAN 2005	DSB	AGB	JL	SEGREGATED PATH AT BUS BOARDER, FRONT SHELTER	NTS	CCE/C28	

Notes

1. All dimensions in mm unless otherwise stated
2. Avoid blind points at shelter
3. The shared path to extend 5m beyond bus cage markings
4. Buff blister tactile may be replaced with contrasting grey blister tactile

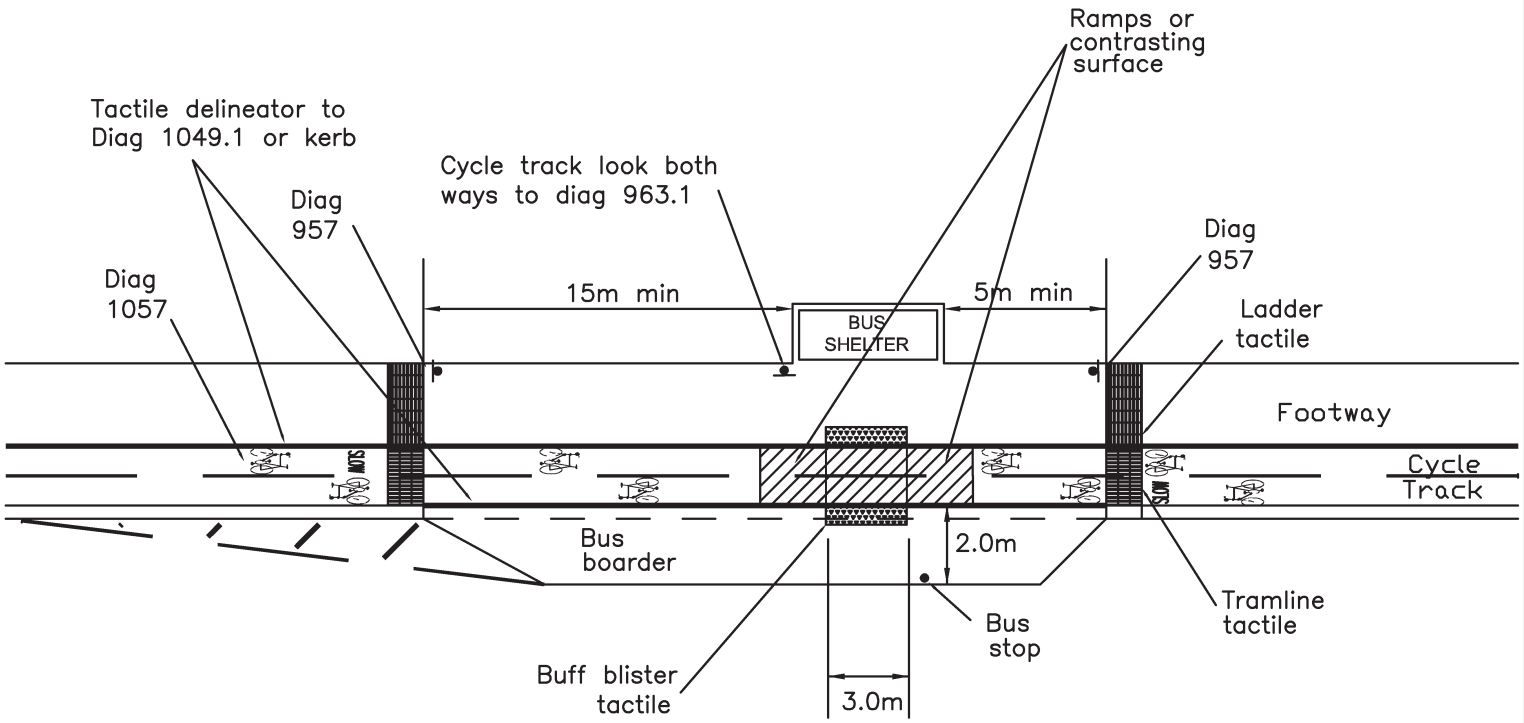

Transport for London

Cycling Centre of Excellence

Windsor House
42-50 Victoria Street
LONDON SW1H 0TL
Telephone 020 7343 5000

Date	Drawn	Checked	Approved	Title	Scale	Drawing no.	Rev.
JAN 2005	DSB	AGB	JL	SEGREGATED PATH AT BUS BOARDER, REAR SHELTER	NTS	CCE/C29	

Notes

1. All dimensions in mm unless otherwise stated
2. Material to be stainless steel or galvanised with nylon coating

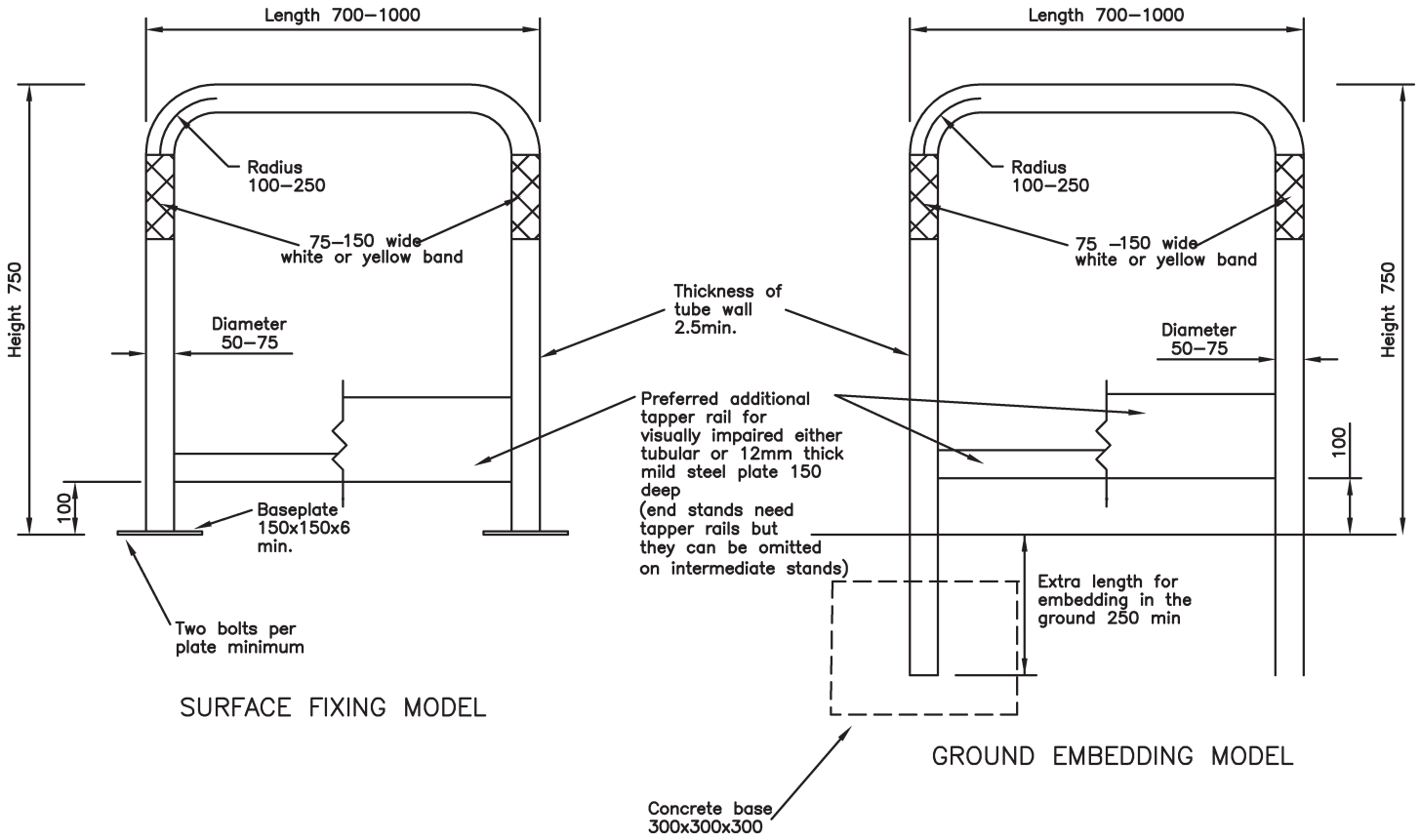

Transport for London

Cycling Centre of Excellence

Windsor House
42-50 Victoria Street
LONDON SW1H 0TL
Telephone 020 7343 5000

Date	Drawn	Checked	Approved	Title	Scale	Drawing no.	Rev.
JAN 2005	DSB	AGB	JL	SHEFFIELD PARKING STAND	NTS	CCE/P1	

Notes

1. All dimensions in mm unless otherwise stated
2. Material to be galvanised steel with nylon coating

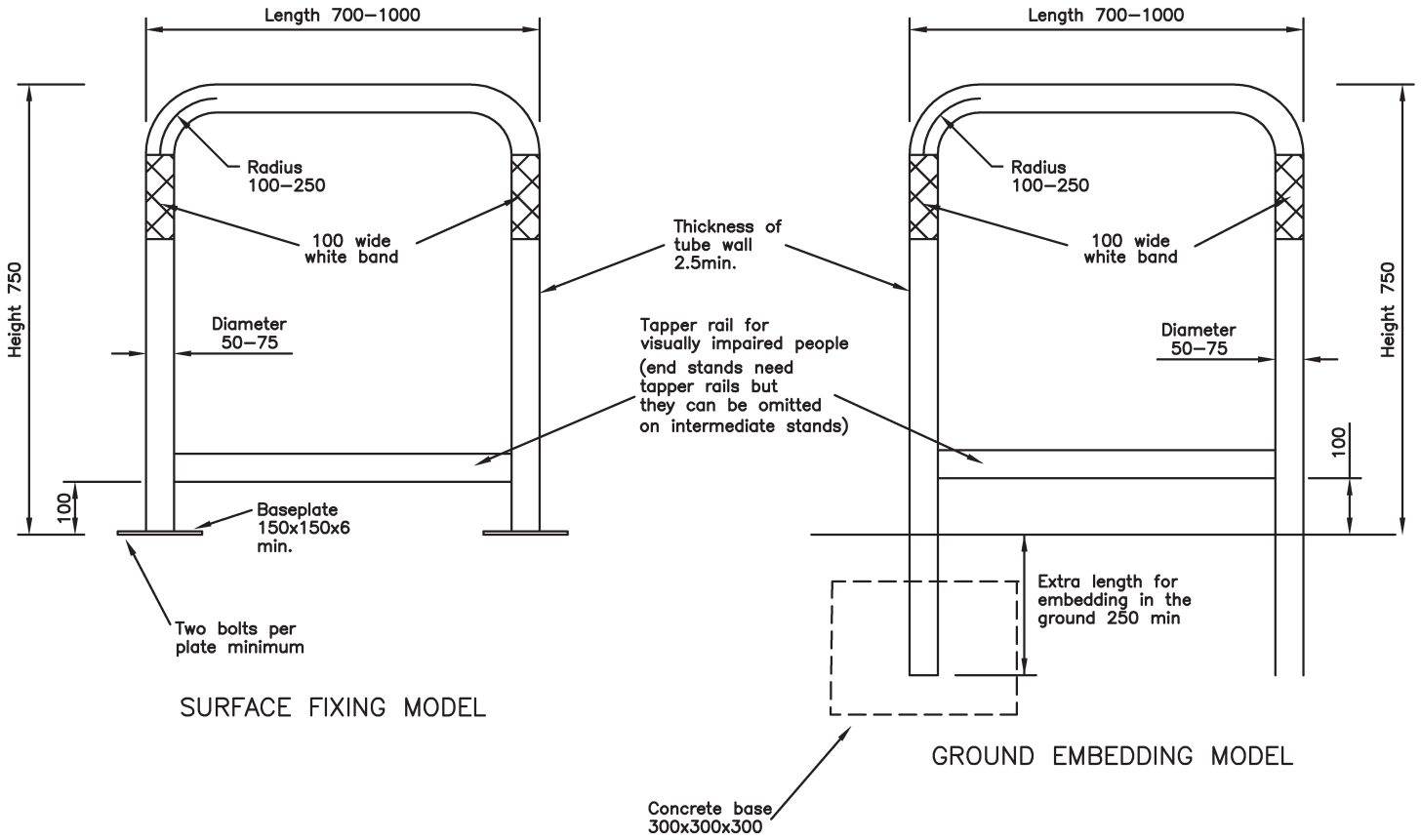

Transport for London

Cycling Centre of Excellence

Windsor House
42-50 Victoria Street
LONDON SW1H 0TL
Telephone 020 7343 5000

Date	Drawn	Checked	Approved	Title	Scale	Drawing no.	Rev.
JAN 2005	DSB	AGB	JL	SHEFFIELD PARKING STAND (2005 TfL PATTERN)	NTS	CCE/P1.1	

Notes

1. All dimensions in mm unless otherwise stated
2. Material to be stainless steel or galvanised with nylon coating

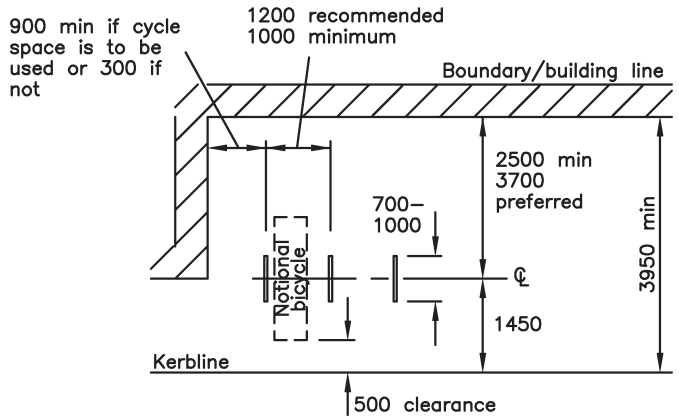

LAYOUT A – PERPENDICULAR

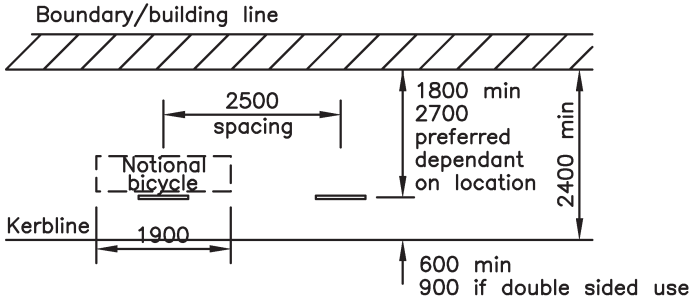

LAYOUT B – ALONG KERB

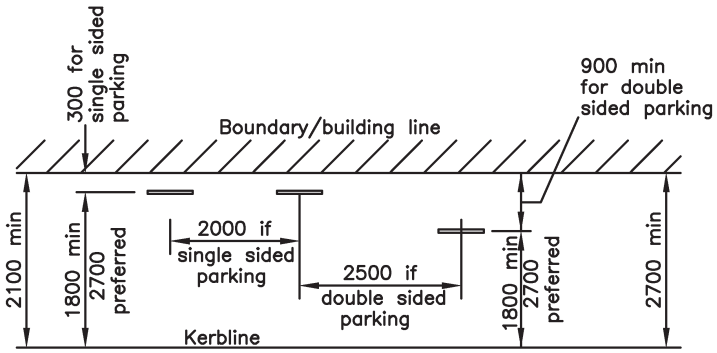

LAYOUT C – ALONG BUILDING LINE

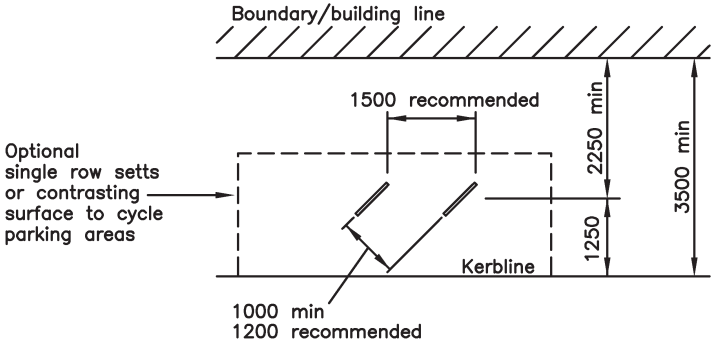

LAYOUT D – ECHELON (45°)

Transport for London

Cycling Centre of Excellence

Windsor House
42-50 Victoria Street
LONDON SW1H 0TL
Telephone 020 7343 5000

Date	Drawn	Checked	Approved	Title	Scale	Drawing no.	Rev.
JAN 2005	DSB	AGB	JL	CYCLE PARKING LAYOUTS	NTS	CCE/P2	

Notes

1. All dimensions in mm unless otherwise stated
2. Size of route number patch will need to be increased if the route number is a double figure.
3. Markings should be on line that cyclists are advised to ride, min 0.5m gap from kerb to edge of marking.
4. DfT approval is required for number patches.

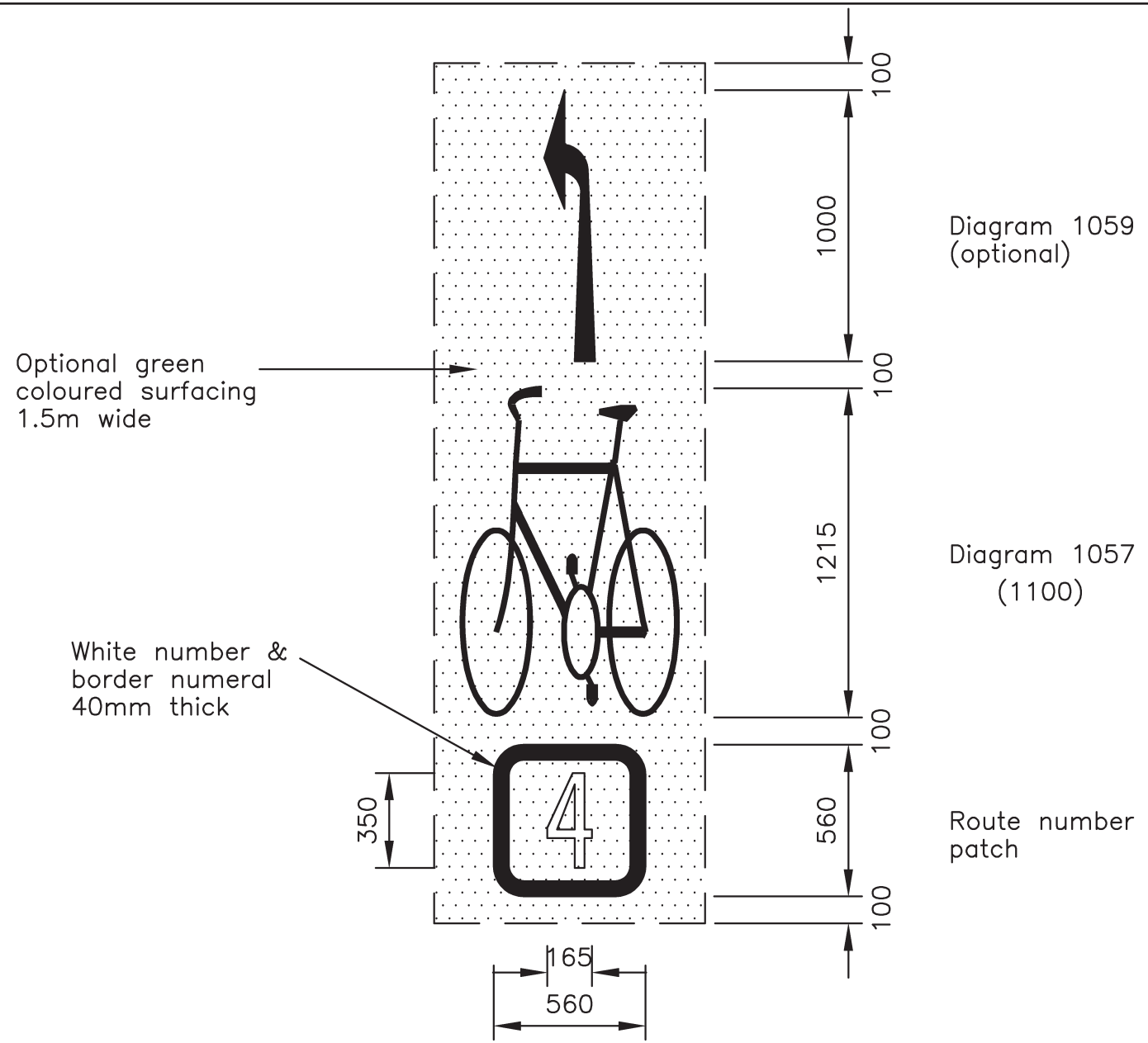

Transport for London

Cycling Centre of Excellence

Windsor House
42-50 Victoria Street
LONDON SW1H 0TL
Telephone 020 7343 5000

Date	Drawn	Checked	Approved	Title	Scale	Drawing no.	Rev.
JAN 2005	DSB	AGB	JL	ROUTE NUMBER ROAD MARKINGS	NTS	CCE/S1	

Notes

1. All dimensions in mm unless otherwise stated
2. Where kerbside parking regularly occurs lay cycle logos outside parking line.
3. Markings should be on line that cyclists are advised to ride, min 0.5m gap from kerb.
4. DfT approval is required for number patches.

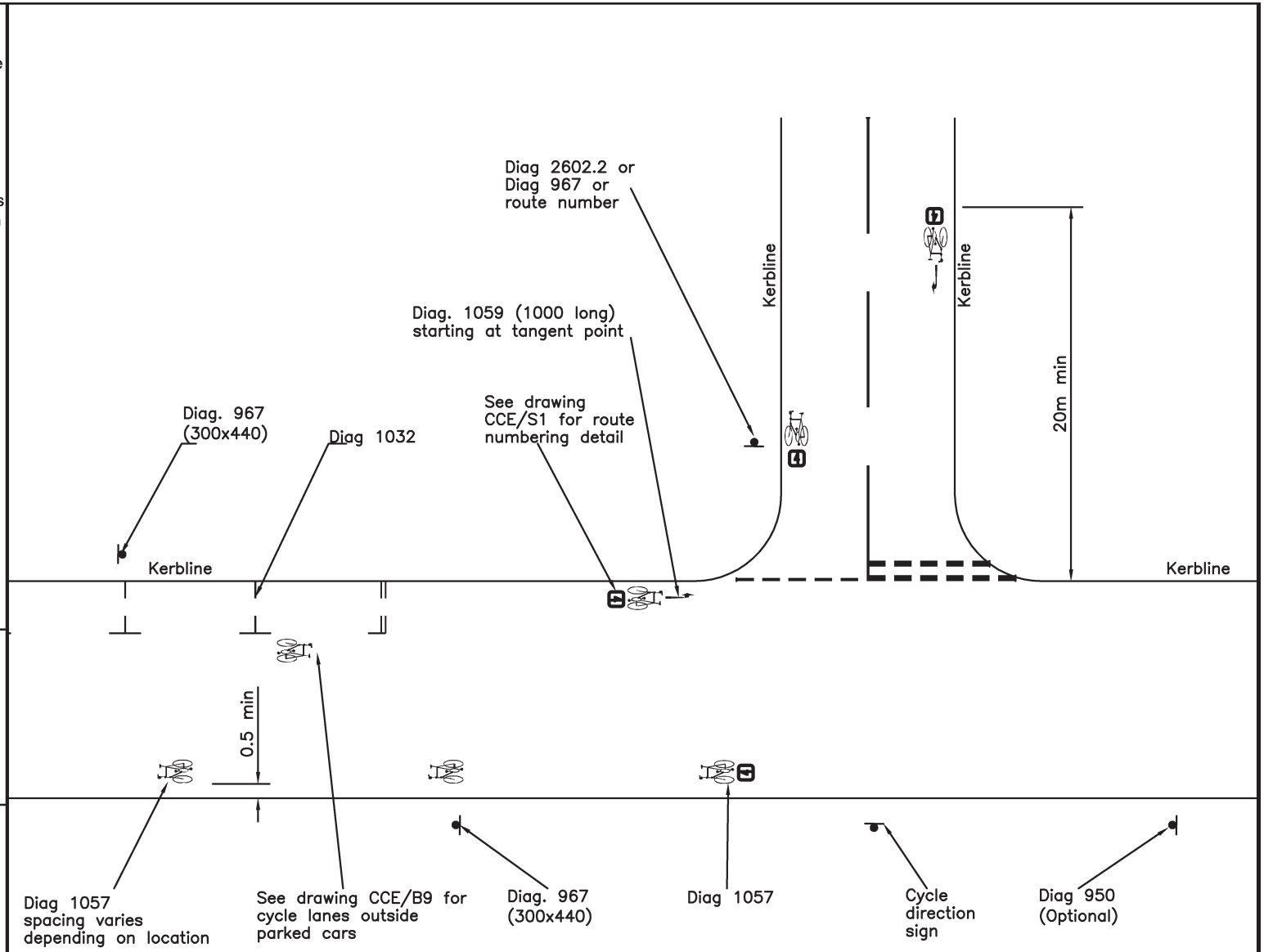

Transport for London

Cycling Centre of Excellence

Windsor House
42-50 Victoria Street
LONDON SW1H 0TL
Telephone 020 7343 5000

Date	Drawn	Checked	Approved	Title	Scale	Drawing no.	Rev.
JAN 2005	DSB	AGB	JL	CYCLE SYMBOLS FOR ROUTE DIRECTIONS	NTS	CCE/S2	

Notes

1. All dimensions in mm unless otherwise stated
2. See CCE/S4 for general notes
3. Dimensions are in stroke widths based upon the 'x'-height of the cycle route number which is 80% of the main sign 'x'-height.
4. 'London Network' branding requires DfT authorisation.
5. Colours of patches:
   National Route - red,
   Regional Route - blue
6. 'x' - heights shown are in milimetres a & apply to all signs on this drawing. All other dimensions are in strokewidths (4sw = 'x' height). 'x' - height is the height of the lowercase "x"

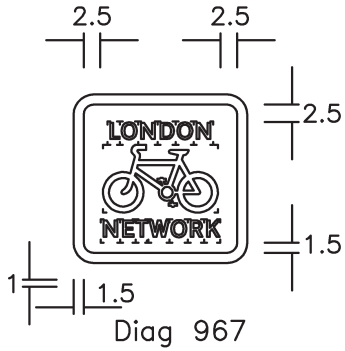

Diag 967

When used as a sign
'x'–height 30mm
recommended (60mm Max)

When used as a logo on a sign
'x'–height of text is 43% of main sign 'x'–height ie when recommended main sign 'x'–height of 30mm is used the 'x'–height will be 15mm.

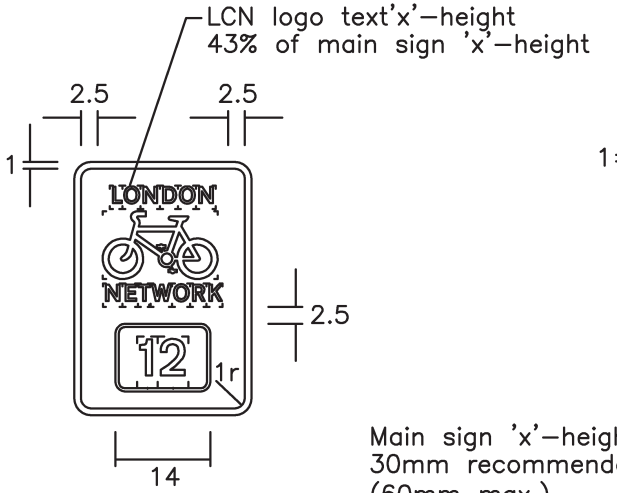

Diag 2602.2

Main sign 'x'–height
30mm recommended
(60mm max.)

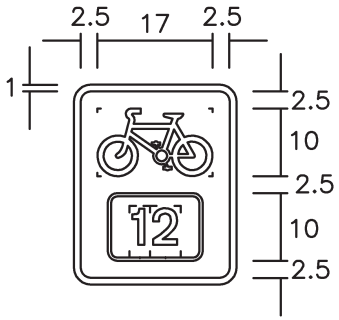

Diag 2602.2

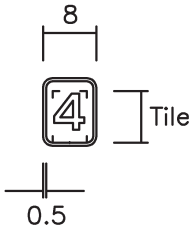

Diag 2602.3

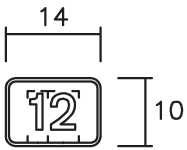

Diag 2602.3

DETAILS OF CYCLE ROUTE NUMBER PATCH

Transport for London

Cycling Centre of Excellence

Windsor House
42-50 Victoria Street
LONDON SW1H 0TL
Telephone 020 7343 5000

Date	Drawn	Checked	Approved	Title	Scale	Drawing no.	Rev.
JAN 2005	DSB	AGB	JL	ROUTE MARKER SIGNS AND ROUTE NUMBER PLATES	NTS	CCE/S3	

Notes

1. Characters are from the Transport Medium Alphabet
2. See CCE/S1 for cycle symbol
3. See CCE/S3 for details of route number patch
4. Colours:-
   Background to main signs-----BLUE
   Legends, borders, arrows & chevrons-----WHITE
   Background to route number patches:
   National route-----RED
   Regional route-----BLUE
5. 'x'-heights shown are in millimetres & apply to all signs on this drawing. All other dimensions are in strokewidths (4sw = 'x'-height). 'x'-height is the height of the lowercase "x"
6. See DoT Local Transport Note 2/94 for further details on flag & stack type sign design

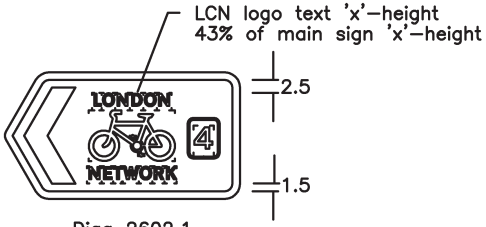

Diag 2602.1

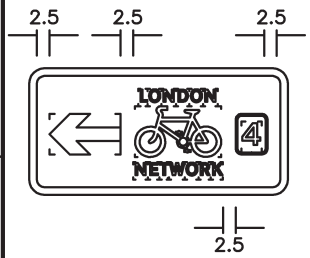

Diag 2601.1

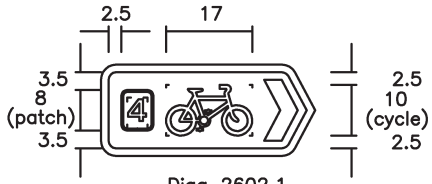

Diag 2602.1

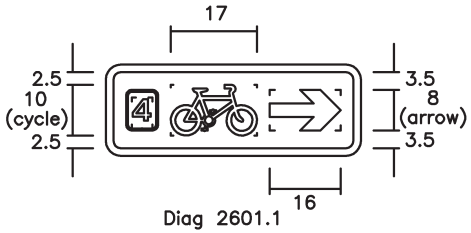

Diag 2601.1

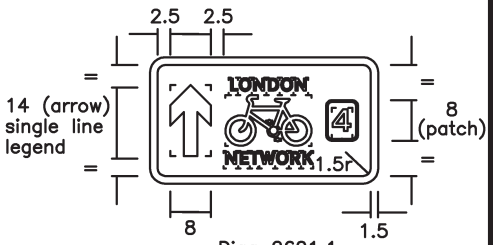

Diag 2601.1

Main sign 'x'height
for all these signs
30mm recommended (60 max)

Transport for London

Cycling Centre of Excellence

Windsor House
42-50 Victoria Street
LONDON SW1H 0TL
Telephone 020 7343 5000

Date	Drawn	Checked	Approved	Title	Scale	Drawing no.	Rev.
JAN 2005	DSB	AGB	JL	ROUTE DIRECTION SIGNS - FLAG REPEATERS	NTS	CCE/S4	

Notes

1. A main sign 'x'-height of 25mm may be appropriate in some locations & for larger signs
2. See CCE/S1 for cycle cymbol
3. See CCE/S3 for details of route number patch
4. Colours:
   Background to main signs - Blue
   Legends, borders, arrows & chevrons - White
   Backgrounds to route number patches:
   National route - Red
   Regional route - Blue
5. 'x'-heights shown are in millimetres & apply to all other signs on this drawing. All other dimensions are in strokewidths (4sw = 'x'-height). 'x'-height is the heights of the lower case "x"
6. See DoT Local Transport Note 2/94 for further details on flag & stack type sign design

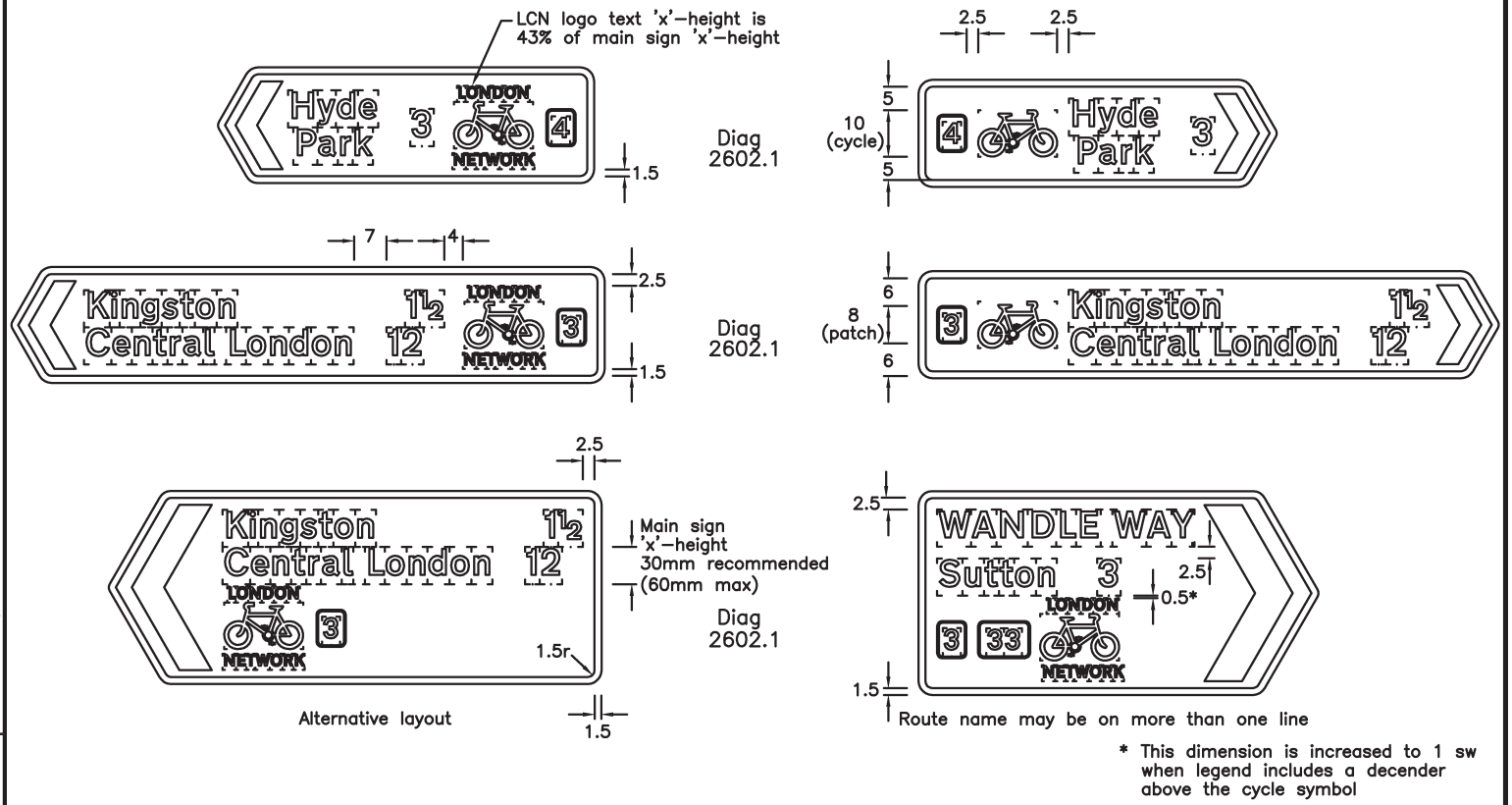

Transport for London

Cycling Centre of Excellence

Windsor House
42-50 Victoria Street
LONDON SW1H 0TL
Telephone 020 7343 5000

Date	Drawn	Checked	Approved	Title	Scale	Drawing no.	Rev.
JAN 2005	DSB	AGB	JL	FLAG TYPE DIRECTION SIGNS	NTS	CCE/S5	

Notes

1. Main sign 'x'-height 30mm recommended (60mm max.) 'x'-height for route number patch is 80% of main sign 'x'-height

2. Colours:-
   Background to main signs-Blue
   Legends, borders, arrows & chevrons-White
   Background to route number patches:
   National route-Red
   Regional route-Blue

3. The legend 'Town Centre' should only be used within half a mile of regional town centres, or 1 mile of 'City Centre'.

Diag 2602.1

LCN logo 'x'–height is 43% of main sign 'x'–height

Diag 2602.1

Diag 2602.1

Diag 2602.1

Diag 966 & 2602.1

Transport for London

Cycling Centre of Excellence

Windsor House
42-50 Victoria Street
LONDON SW1H 0TL
Telephone 020 7343 5000

Date	Drawn	Checked	Approved	Title	Scale	Drawing no.	Rev.
JAN 2005	DSB	AGB	JL	VARIATIONS ON FLAG TYPE DIRECTION SIGNS	NTS	CCE/S6	

Notes

1. Diagram numbers are from the Traffic Signs Regulations & General Directions 2002

2. Main sign 'x'-height 30mm recommended. 'x'-height for route number patch is 80% of main sign 'x'-height

3. Wording in brackets (via park) has a smaller 'x'-height than rest of sign. 25mm recommended when main sign 'x'-height is 30mm

4. Colours:-
   Background to main signs-----BLUE
   Legends, borders, arrows & chevrons-----WHITE
   Background to route number patches:
   National route-----RED
   Regional route-----BLUE

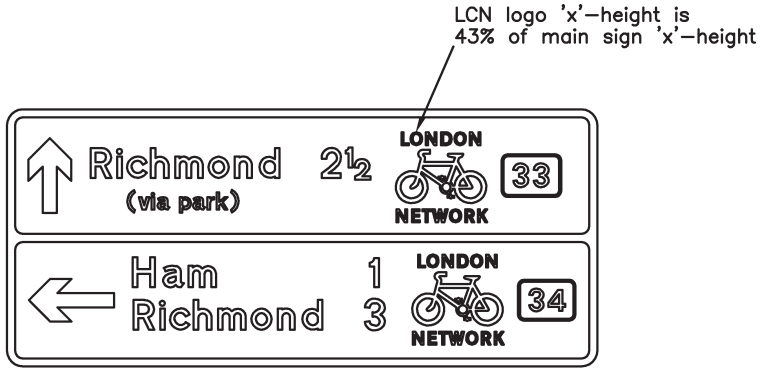

Diag 2601.1

Diag 2601.1

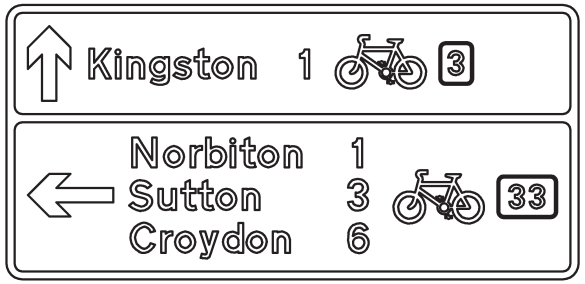

Diag 2601.1

Transport for London

Cycling Centre of Excellence

Windsor House
42-50 Victoria Street
LONDON SW1H 0TL
Telephone 020 7343 5000

Date	Drawn	Checked	Approved	Title	Scale	Drawing no.	Rev.
JAN 2005	DSB	AGB	JL	STACK TYPE ADVANCE DIRECTION SIGNS	NTS	CCE/S7	

Notes

1. Diagram numbers are from the Traffic Signs Regulations & General Directions 2002

2. Main sign 'x'-height 30mm 35mm recommended 60mm max. 'x'-height for route number patch is 80% of main sign 'x'-height

3. Wording in brackets (via park) has a smaller 'x'-height than rest of sign. 25mm recommended when main sign 'x'-height is 30mm

4. Colours:-
   Background to main signs-----BLUE
   Legends, borders, arrows & chevrons-----WHITE
   Background to route number patches:
   National route-----RED
   Regional route-----BLUE

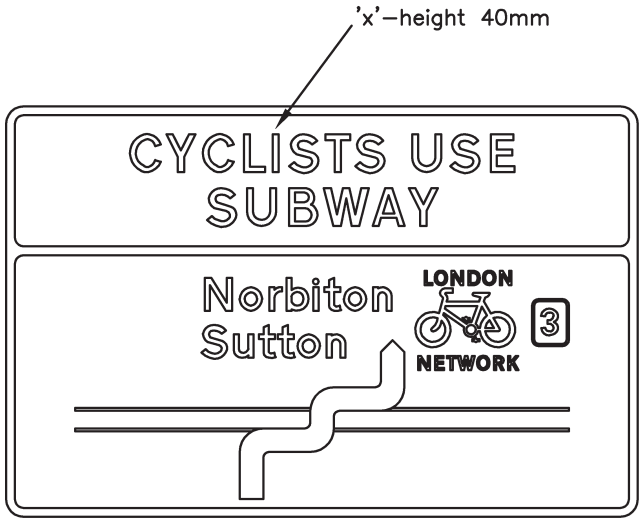

Diag 2601.2 Variant

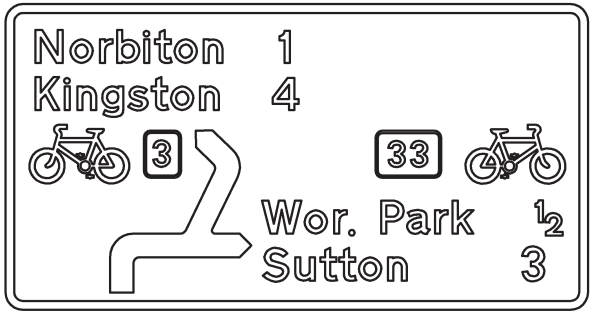

Diag2601.2 Variant

Transport for London

Cycling Centre of Excellence

Windsor House
42-50 Victoria Street
LONDON SW1H 0TL
Telephone 020 7343 5000

Date	Drawn	Checked	Approved	Title	Scale	Drawing no.	Rev.
JAN 2005	DSB	AGB	JL	MAP TYPE ADVANCE DIRECTION SIGNS	NTS	CCE/S8	

Notes

1. Diagram numbers are from the Traffic Signs Regulations & General Directions 2002.
2. Characters are from the Transport Medium Alphabet
3. See CCE/S1 for cycle symbol
4. Colours:-
   Background to main signs-----BLUE
   Legends, borders, arrows & chevrons-----WHITE
   Background to route number patches:
   National route-----RED
   Regional route-----BLUE
5. 'x'-heights shown are in millimetres & apply to all signs on this drawing. All other dimensions are in strokewidths (4sw = 'x'-height). 'x'-height is the height of the lowercase "x"
6. See DoT Local Transport Note 2/94 for further details on flag & stack type sign design

Transport for London

Cycling Centre of Excellence

Windsor House
42-50 Victoria Street
LONDON SW1H 0TL
Telephone 020 7343 5000

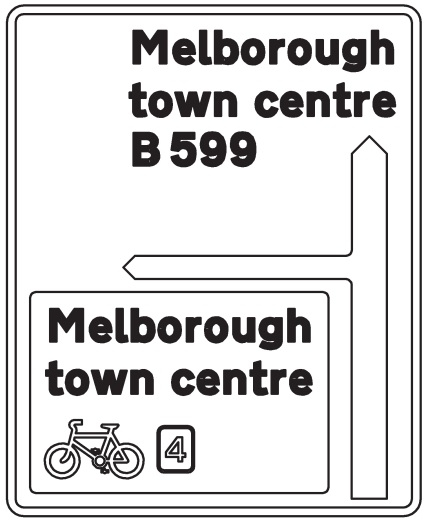

Diag 2105.1

Junction ahead of a non–primary route with an alternative numbered route for pedal cycles forming part of a national cycle route network.

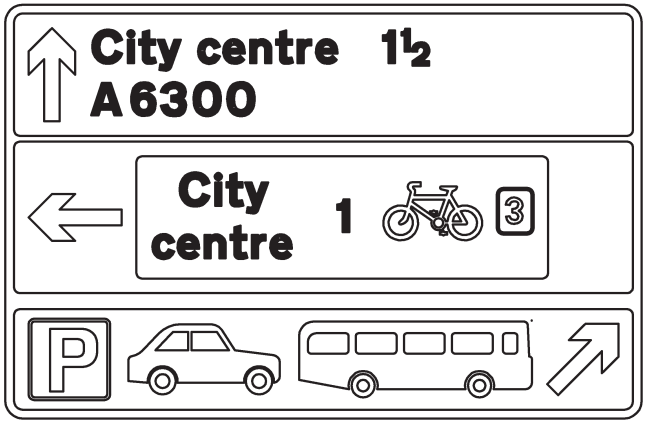

Diag 2106.1

Junction ahead of a non–primary route with an alternative numbered route for pedal cycles forming part of a national cycle route network and a route leading to parking for cars and buses.

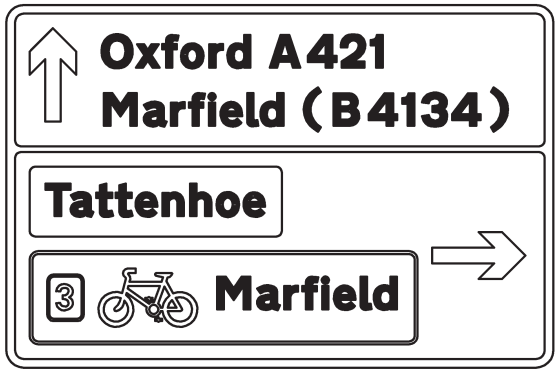

Diag 2005.1

Junction ahead of a primary route with a non–primary route which is an alternative numbered route for pedal cycles forming part of a national cycle route network.

Date	Drawn	Checked	Approved	Title	Scale	Drawing no.	Rev.
JAN 2005	DSB	AGB	JL	COMBINED DIRECTION SIGNS	NTS	CCE/S9	

Notes

1. All dimensions in mm unless otherwise stated
2. 'x' - heights shown are in milimetres & apply to all signs on this drawing.
   'x' - height is the height of the lowercase "x"

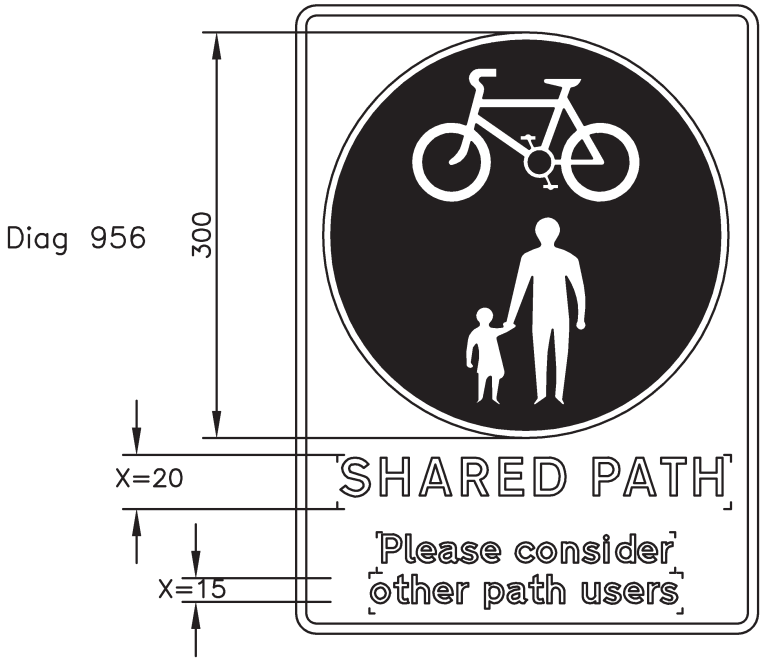

NOTES:

1. Dimensions (in mm):
   Width 340mm, Height: 465
2. Area: 0.16 sq m
3. x–Heights: 20, 15
4. Single sided
5. Colour for main sign:
   White on green,
6. Colour for 956 patch:
   White on blue

Transport for London

Cycling Centre of Excellence

Windsor House
42-50 Victoria Street
LONDON SW1H 0TL
Telephone 020 7343 5000

Date	Drawn	Checked	Approved	Title	Scale	Drawing no.	Rev.
JAN 2005	DSB	AGB	JL	SHARED USE COURTESY SIGNS	NTS	CCE/S10	

Notes

1. Colours:
   Background to main signs - Blue
   Legends, & borders - White

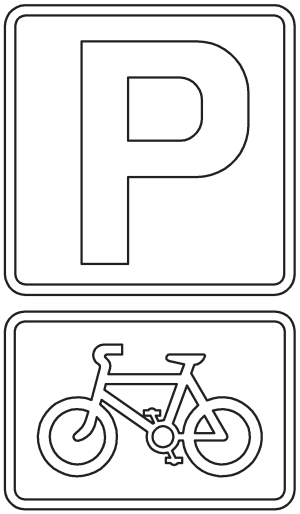

Diag 968.1

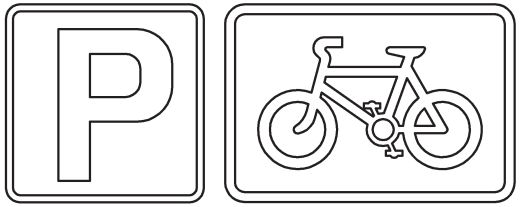

Diag 968

Transport for London

Cycling Centre of Excellence

Windsor House
42-50 Victoria Street
LONDON SW1H 0TL
Telephone 020 7343 5000

Date	Drawn	Checked	Approved	Title	Scale	Drawing no.	Rev.
JAN 2005	DSB	AGB	JL	CYCLE PARKING SIGNS	NTS	CCE/S11	